MICRO SWITCH
a Honeywell Division
FED. MFG. CODE 91929

SWITCH – BASIC

CATALOG LISTING
1DM435

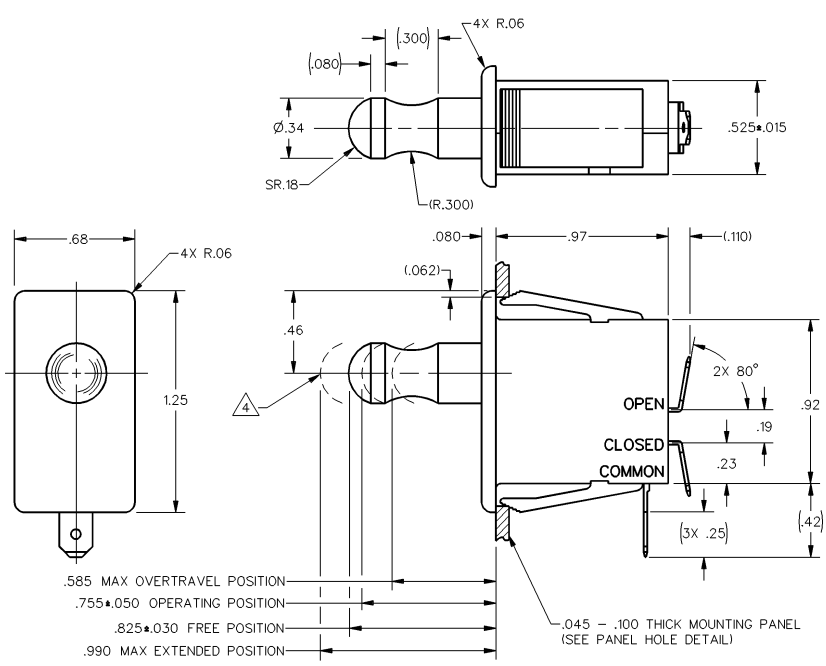

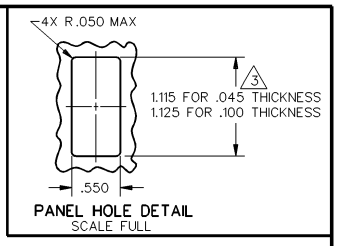

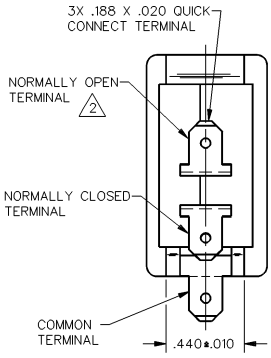

NOTES
1 – WHITE PLASTIC CASE AND PLUNGER
2 FLAG STYLE QUICK CONNECT RECEPTACLE REQUIRED FOR NORMALLY OPEN TERMINAL IF SWITCH IS WIRED BEFORE MOUNTING
3 NOMINAL CUTOUT DIMENSION FOR PANELS BETWEEN .045 AND .100 SHOULD BE INTERPOLATED BETWEEN 1.115 AND 1.125
4 PUSH TO OPERATE – MOMENTARY, PULL TO OPERATE – MAINTAINED

THIS DRAWING COVERS A PROPRIETARY ITEM AND IS THE PROPERTY OF MICRO SWITCH. A DIVISION OF HONEYWELL. THIS DRAWING IS NOT TO BE COPIED OR USED WITHOUT THE APPROVAL OF MICRO SWITCH

THIRD ANGLE PROJECTION

SCALE 2 TO 1

DO NOT SCALE PRINT

CHARACTERISTICS
OPERATING FORCE – – – – – 15 OZ MAX

ELECTRICAL DATA
CONTACT ARRANGEMENT
S P D T
L181
10A 1/2HP 125, 250 OR 277 VAC

UNLESS OTHERWISE SPECIFIED TOLERANCES ARE

ONE PLACE	(.0)	±.030
TWO PLACE	(.00)	±.015
THREE PLACE	(.000)	±.005
ANGLES		± 5°

WEIGHT

ANSI Y14.5M–1982 APPLIES

CATALOG LISTING 1DM435
ISSUE M 1
REVISIONS
REPLACES X98342–DM
RELEASE NO. PR–21011
CHECK
CHECK
CHECK
DRAWN TSM 21 APR 94
DDM/CAD

Downloaded from Elcodis.com electronic components distributor