MICRO SWITCH
a Honeywell Division
FED. MFG. CODE 91929

SWITCH - TOGGLE

CATALOG LISTING
2TL6 SERIES CHART 1

THIS DRAWING COVERS A PROPRIETARY ITEM AND IS THE PROPERTY OF MICRO SWITCH. A DIVISION OF HONEYWELL. THIS DRAWING IS NOT TO BE COPIED OR USED WITHOUT THE APPROVAL OF MICRO SWITCH

CATALOG LISTING	CIRCUIT MADE (5) WITH TOGGLE LEVER IN: KEYWAY SIDE (1-2,4-5)	CENTER (1-2,4-5)	OPPOSITE KEYWAY (2-3,5-6)	MILITARY RATING (AMPS) RESISTIVE LOAD DC VOLTS 28	DC VOLTS 125	DC VOLTS 250	AC VOLTS 125	AC VOLTS 250	LAMP LOAD 28 VDC	LAMP LOAD 125 VAC	INDUCTIVE LOAD 28 VDC	INDUCTIVE LOAD 125 VAC
2TL6-1	ON	OFF	ON	20	.75	.5	15	6	7	4	15	15
2TL6-2	OFF	NONE	ON									
2TL6-3	ON	NONE	ON									
2TL6-21	NONE	OFF	ON									
2TL6-31	NONE	ON	ON									
2TL6-4	MOM OFF	NONE	ON	18	.75	.5	11	6	5	2	10	8
2TL6-5	MOM ON	OFF	ON									
2TL6-6	MOM ON	NONE	OFF									
2TL6-7	MOM ON	OFF	MOM ON									
2TL6-8	MOM ON	NONE	ON									
2TL6-51	NONE	ON	MOM ON									
2TL6-61	MOM ON	OFF	NONE									

(REFER TO L191 FOR UL RATING)

(REFER TO L192 FOR UL RATING)

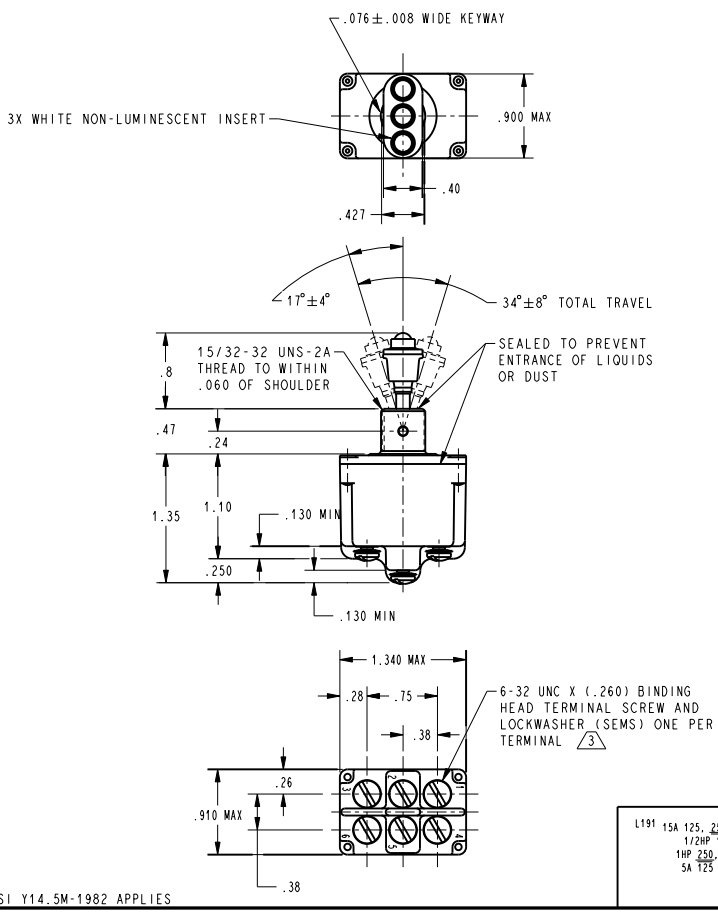

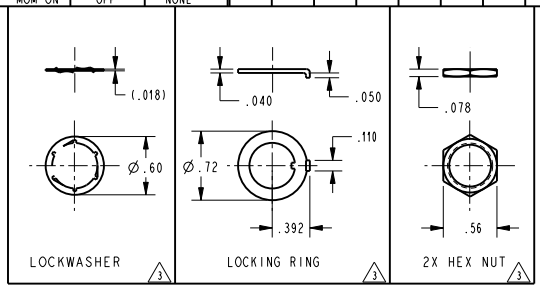

NOTES
1 - SWITCHES ARE CAPABLE OF WITHSTANDING A TEMPERATURE OF 160°F CONTINUOUSLY AT FULL RATED LOAD
2 - CIRCUIT DESIGNATION AND MICRO SWITCH CATALOG LISTING MARKED ON SIDE OF SWITCH
(3) FURNISHED UNASSEMBLED
4 - FOR TERMINAL COVER SEE MICRO SWITCH CATALOG LISTING 5PA8
(5) APPLIES ONLY TO "ON" AND "MOMENTARY ON" POSITIONS
6 - WHITE NON-FLUORESCENT CAP IS ATTACHED TO LEVER BY A LOCKING TYPE INTERNAL THREAD. LEVER CAP MAY BE REMOVED TO INSTALL SWITCH

ELECTRICAL DATA

L191	L192
15A 125, 250, 277 VAC 1/2HP 125 VAC 1HP 250, 277 VAC 5A 125 VAC "L"	10A 125, 250, 277 VAC 1/4HP 125 VAC 1/2HP 250, 277 VAC 3A 125 VAC "L"

THIRD ANGLE PROJECTION

SCALE FULL

DO NOT SCALE PRINT

UNLESS OTHERWISE SPECIFIED TOLERANCES ARE

ONE PLACE	(.0)	±.030
TWO PLACE	(.00)	±.015
THREE PLACE	(.000)	±.005
ANGLES		±

WEIGHT .12 LB APPROX

ANSI Y14.5M-1982 APPLIES

CATALOG LISTING 2TL6 SERIES CHART 1
PAGE 1 OF 1
RELEASE NO. CO-32835
REPLACES
ISSUE 8

REVISIONS
A CO-94438 S A V 23 NOV 99
B 0003037 TSG 05 FEB 04

DRAWN	CHECK	CHECK	CHECK	CHECK
S A V 23 NOV 99	JAF 23 NOV 99	MDM 05 FEB 04		

PTC/CAD 2D

Downloaded from Elcodis.com electronic components distributor