MICRO SWITCH
FREEPORT, ILLINOIS, U.S.A.
A DIVISION OF HONEYWELL
FED. MFG. CODE 91929

SWITCH-TOGGLE

CATALOG LISTING
11TW19 SERIES
CHART 3

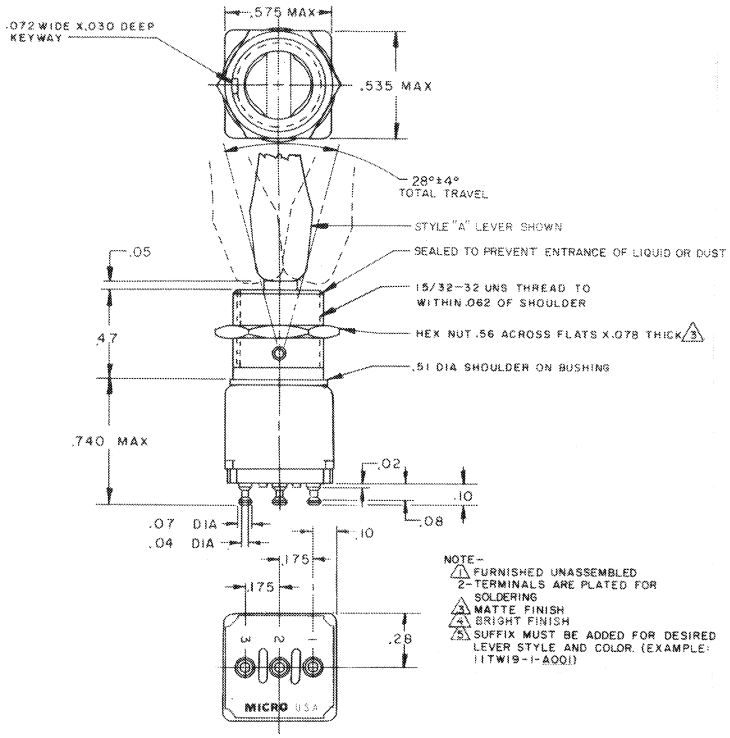

NOTE-
1. FURNISHED UNASSEMBLED
2. TERMINALS ARE PLATED FOR SOLDERING
3. MATTE FINISH
4. BRIGHT FINISH
5. SUFFIX MUST BE ADDED FOR DESIRED LEVER STYLE AND COLOR. (EXAMPLE: 11TW19-1-A001)

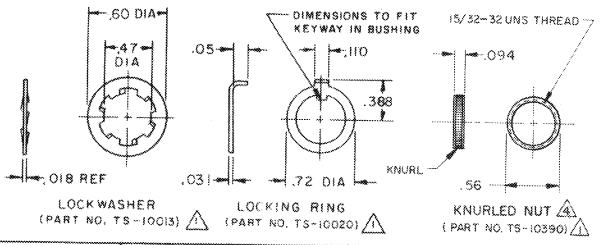

CATALOG LISTING	ONE EXTREME POSITION (KEYWAY) 2-1	CENTER POSITION	OTHER EXTREME POSITION (OPPOSITE KEYWAY) 2-3
11TW19-1 5	ON	OFF	ON
11TW19-2 5	OFF	NONE	ON
11TW19-3 5	ON	NONE	ON
11TW19-5 5	MOM ON	OFF	ON
11TW19-7 5	MOM ON	OFF	MOM ON
11TW19-8 5	MOM ON	NONE	ON

LEVER STYLE

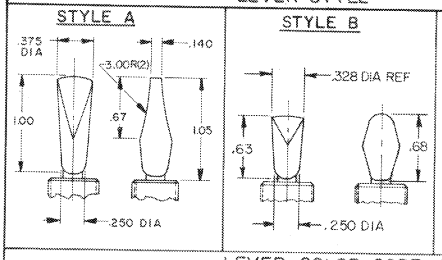

LEVER COLOR CODE 5

COLOR IDENT	COLOR	COLOR IDENT	COLOR	COLOR IDENT	COLOR
001	WT-07 WHITE				
002	BK-09 BLACK				
003	BL-05 BLUE				
004	RD-08 RED				
005	GN-08 GREEN				
006	OR-06 ORANGE				
007	GY-95 GRAY				

THIS DRAWING COVERS A PROPRIETARY ITEM AND IS THE PROPERTY OF MICRO SWITCH, A DIVISION OF MINNEAPOLIS-HONEYWELL REGULATOR CO. THIS DRAWING IS NOT TO BE COPIED OR USED WITHOUT THE APPROVAL OF MICRO SWITCH.

CHARACTERISTICS

ELECTRICAL DATA
CONTACT ARRANGEMENT
-L 117- 5A-125 VAC

SCALE 2 TO 1
DO NOT SCALE PRINT
UNLESS OTHERWISE NOTED
DIMENSIONS ARE IN INCHES
TOLERANCES ARE:
ONE PLACE (.0) ±.030
TWO PLACE (.00) ±.015
THREE PLACE (.000) ±.005
ANGLES ±
WEIGHT .025 LB MAX

M 11TW19 SERIES
DRAWING NUMBER 28 10
ISSUE X 28 34 38
REPLACES
RELEASE NO. PR-1210
CHECK
REVISIONS
A E027404 L S D 13 MAY 70
B E027852 E027860 K B S 3 SEP 70
C 49472 C D 5 MAY 81
D C050565 K S 12 DEC 81
E C056510 K E W 16 DEC 83
F 54927 C D 12 MAY 84
G PR-13098 J A P 30 MAY 85
H C061252 J A P 16 MAR 87
J C062959 P S V 24 FEB 88
CHECK
APPROVED
DATE
DRAWN K A S 13 APR 70
FC-65979-003

Downloaded from Elcodis.com electronic components distributor