MICRO SWITCH
FREEPORT, ILLINOIS, U.S.A.
A DIVISION OF HONEYWELL
FED. MFG. CODE 91929

SWITCH—TOGGLE

CATALOG LISTING
104TL2 SERIES
CHART 2

THIS DRAWING COVERS A PROPRIETARY ITEM AND IS THE PROPERTY OF MICRO SWITCH, A DIVISION OF HONEYWELL. THIS DRAWING IS NOT TO BE COPIED OR USED WITHOUT THE APPROVAL OF MICRO SWITCH.

MILITARY STANDARD NUMBER (5)	CATALOG LISTING (5)	AVAILABLE LOCKING COMBINATIONS FOR CONFIGURATION SEE LETTERED DETAILS	CIRCUIT MADE WITH TOGGLE LEVER IN (6): KEYWAY SIDE (1-2, 4-5, 7-8, 10-11)	CENTER (1-2, 4-5, 7-8, 10-11)	OPPOSITE KEYWAY (2-3, 5-6, 8-9, 11-12)	CURRENT CAPACITY (AMPS) RESISTIVE LOAD DC VOLTS 30	115	250	AC VOLTS 115	230	LAMP LOAD 30 VDC	115 VAC	INDUCTIVE LOAD 30 VDC	115 VAC
MS27789-21	★ 104TL2-1	A,B,D,E,F,G,H,J,K,L,M,N,P	ON	OFF	ON									
MS27789-22	104TL2-2	D, F, G	OFF	NONE	ON									
MS27789-23	★ 104TL2-3	D, F, G	ON	NONE	ON	7.5	.75	.5	7.5	6	5	4	7.5	7.5
MS27789-24	104TL2-21	E, F, K, M	NONE	OFF	ON									
MS27789-33	104TL2-31	E, F, K, M	NONE	ON	ON									
MS27789-29	104TL2-4	F	MOM OFF	NONE	ON									
MS27789-31	104TL2-5	E, F, K, L, M, N	MOM ON	OFF	ON									
MS27789-30	104TL2-6	F	MOM ON	NONE	OFF									
MS27789-27	104TL2-7	E, L, N	MOM ON	OFF	MOM ON	7.5	.75	.5	7.5	6	4	2	7.5	7.5
MS27789-26	104TL2-8	F	MOM ON	NONE	ON									
MS27789-32	104TL2-51	E	NONE	ON	MOM ON									
MS27789-28	104TL2-61	E	MOM ON	OFF	NONE									

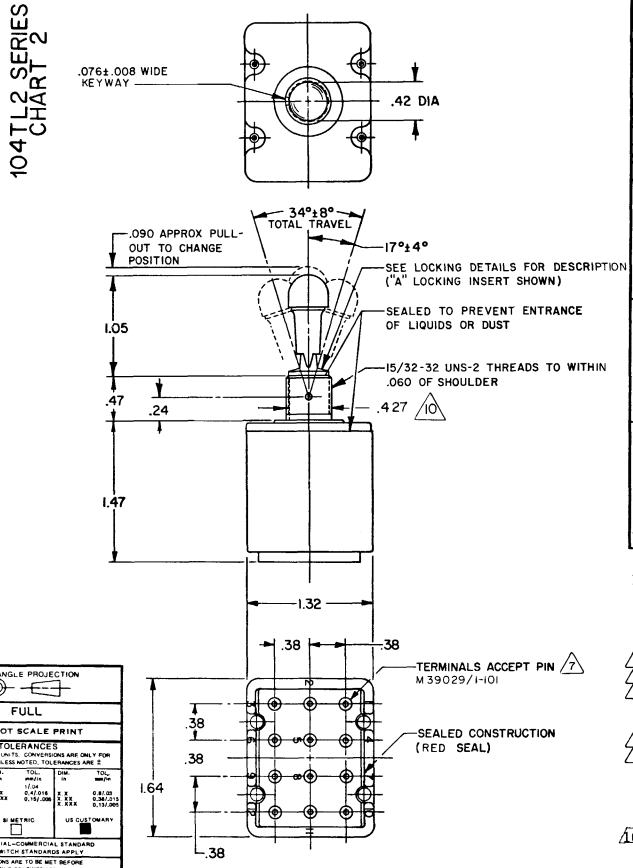

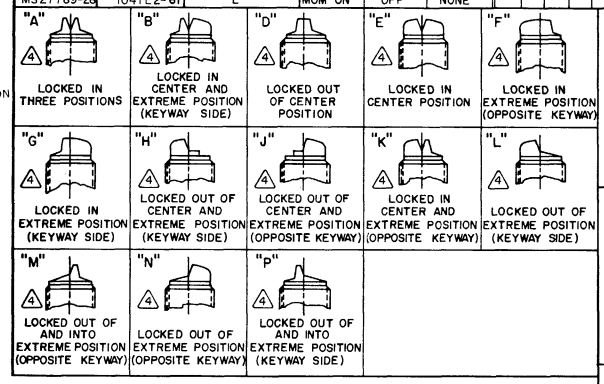

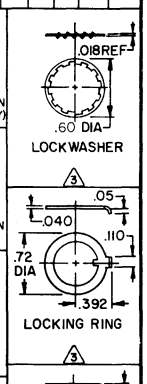

NOTES
1 - SWITCHES ARE CAPABLE OF WITHSTANDING A TEMPERATURE OF 160°F CONTINUOUSLY AT FULL RATED LOAD
2 - CIRCUIT DESIGNATION, MICRO SWITCH CATALOG LISTING AND "MS" NUMBER STAMPED ON SIDE OF SWITCH
(3) FURNISHED UNASSEMBLED
(4) KEYWAY SHOWN ON LEFT SIDE
(5) SUFFIX LETTER MUST BE ADDED FOR DESIRED TYPE OF TOGGLE LOCKING. SEE CHART FOR AVAILABLE LOCKING COMBINATIONS
(6) APPLIES ONLY TO "ON" AND "MOMENTARY ON" POSITIONS
(7) THE SEALING GROMMET SHALL SEAL ON A SMOOTH WIRE INSULATION OF .040 TO .083 DIAMETERS (16-20 GAGE)
8 - UNUSED TERMINAL HOLES MAY BE SEALED WITH PLUGS M83723-28-20
9 - THE SWITCHES ARE QUALIFIED UNDER MIL-S-3950
(10) FROM BOTTOM OF KEYWAY TO MAJOR DIA. OF 15/32 THREAD

THIRD ANGLE PROJECTION
SCALE FULL
DO NOT SCALE PRINT
TOLERANCES
APPLY TO DESIGN UNITS. CONVERSIONS ARE ONLY FOR REFERENCE. UNLESS NOTED, TOLERANCES ARE ±

	DIM. mm	TOL. mm/m	DIM. in	TOL. mm/m
NO PLACES	X	1/.04		
ONE PLACE	X.X	0.4/.016	X.X	0.8/.03
TWO PLACES	X.XX	0.15/.006	X.XX	0.38/.015
THREE PLACES			X.XXX	0.13/.005
ANGLES				

SI METRIC — US CUSTOMARY
DESIGN UNITS
RAW MATERIAL—COMMERCIAL STANDARD
MICRO SWITCH STANDARDS APPLY
DIMENSIONS ARE TO BE MET BEFORE PROTECTIVE COATINGS ARE APPLIED
WEIGHT

104TL2 SERIES CHART 2
PAGE 1 OF 1
RELEASE NO. PR-6855 REPLACES
DRAWING NUMBER M
ISSUE 9

REVISIONS

A	PR-6855	J A P 19 DEC 77	
B	C049144	R J H 22 APR 81	
C	C0-50496	K A O 16 NOV 81	
D	C056074	G J W 26 NOV 84	
E	C057478	T A D 12 JUL 85	
F	204911	G B T 19 FEB 02	

DRAWN J A P 19 DEC 77 CHECK 20 DEC 77 CHECK CHECK

RASTER FO-52850

Downloaded from Elcodis.com electronic components distributor