AWM43600V

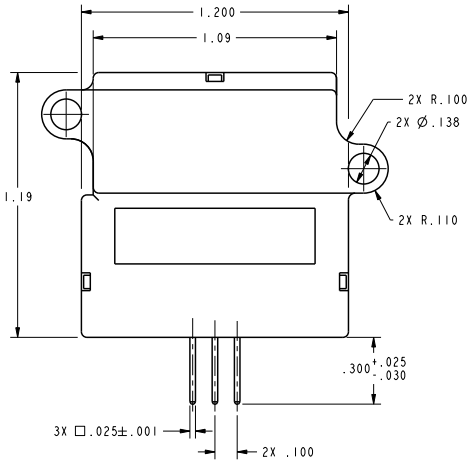

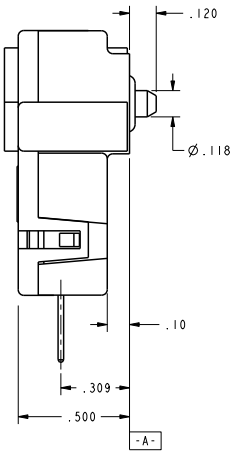

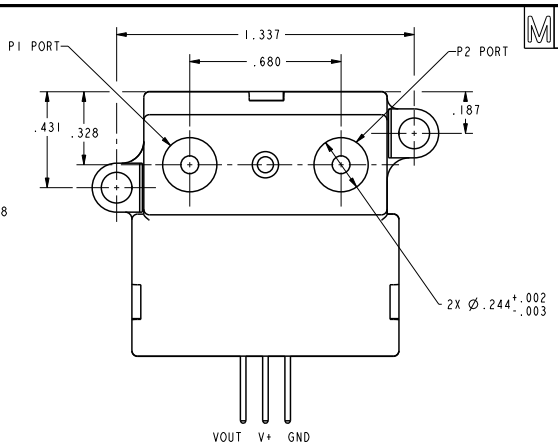

SPECIFICATIONS					
ELECTRICAL SPECIFICATIONS	MIN	NOM	MAX	UNITS	NOTES
RECOMMENDED EXCITATION	9.990	10.000	10.010	Vdc	
POWER SUPPLY (MIN/MAX)	10.000	---	15.000	Vdc	(2) (5)
POWER CONSUMPTION	---	---	75	mW	
FLOW RANGE	0 - 6 LPM				
OUTPUT LOAD	10 mA source 20 mA Typ				
CALIBRATION GAS	NITROGEN				
OUTPUT @ LASER TRIM POINT	5.000 VDC @ 6LPM				
NULL OUTPUT	1.000 ± .050 VDC				
NULL OUTPUT SHIFT:					
25 TO -25°C AND 25 TO 85°C	---	---	±50	mvdc	
FULL SCALE OUTPUT SHIFT:					
+25°C TO -25°C	---	---	-7.0	% READ	
+25°C TO +85°C (5)	---	---	7.0	% READ	
RATIOMETRICITY ERROR	---	---	±0.8	% READ	(Typ) (2)
REPEATABILITY & HYSTERESIS	---	---	±1.0	% READ	(3)
RESPONSE TIME	---	1.0	3.0	msec	(1)
FLOW SPECIFICATIONS	FLOW (SLM)	NOMINAL (vdc)	TOLERANCE ±(vdc)		
	0	1.000	0.050		
	1	3.100	0.30		
	2	3.800	0.30		
	3	4.400	0.35		
	4	4.700	0.25		
	5	4.890	0.20		
	6	5.000	0.150		
MECHANICAL SPECIFICATION		SPECIFICATION LIMITS			
PRESSURE DROP @ FULL SCALE		8 IN. H20 Typ			
TEMPERATURE RANGE					
OPERATING (5)		-25 TO +85°C			
STORAGE		-40 TO +125°C			
TERMINATION		(.100" CENTERS) .025" SQUARE			
SHOCK RATING (5 DROPS, EACH OF 6 AXIS)		100g PEAK			
OVERPRESSURE		25 PSI			

NOTES
1 - RESPONSE TIME IS TYPICALLY 1 msec FROM 10-90%
2 - OUTPUT VOLTAGE IS RATIOMETRIC TO SUPPLY VOLTAGE
3 - REPEATABILITY & HYSTERESIS TOLERANCES REFLECT INHERENT INACCURACIES OF THE MEASUREMENT EQUIPMENT
4 - MOUNTING TORQUE 2 1/2 TO 6 IN.LBS (.3 TO .7 NEWTON METERS)
5 - AN 11 VDC MIN SUPPLY VOLTAGE IS REQUIRED WITH TEMPERATURES ABOVE 50°C

ANSI Y14.5M-1982 APPLIES

THIS DRAWING COVERS A PROPRIETARY ITEM AND IS THE PROPERTY OF MICRO SWITCH, A DIVISION OF HONEYWELL. THIS DRAWING IS NOT TO BE COPIED OR USED WITHOUT THE APPROVAL OF MICRO SWITCH.

MICRO SWITCH a Honeywell Division
FED. MFG. CODE 91929

GAS FLOW TRANSDUCER SPECIFICATION

CATALOG LISTING
AWM43600V

THIRD ANGLE PROJECTION
SCALE 3:1
DO NOT SCALE PRINT
UNLESS OTHERWISE SPECIFIED TOLERANCES ARE
ONE PLACE (.0) ±.030
TWO PLACES (.00) ±.015
THREE PLACES (.000) ±.005
ANGLES ±
WEIGHT

AWM43600V
SHEET 1 OF 1
RELEASE NO. DR-4911
REPLACES X100047-AW
DRAWING NUMBER
10JUL07
ISSUE 4
CHK CMH
REVISIONS
A CO-84755 GRY (AUG07)
B 206455 FLD (SEP02)
C 0032943 BDW (10JUL07)
SAV
15JUL96
DRAWN KAG
PTC/CAD 3D

Downloaded from Elcodis.com electronic components distributor