MICRO SWITCH
a Honeywell Division
FED. MFG. CODE 91929

MAGNET

CATALOG LISTING
106MG10

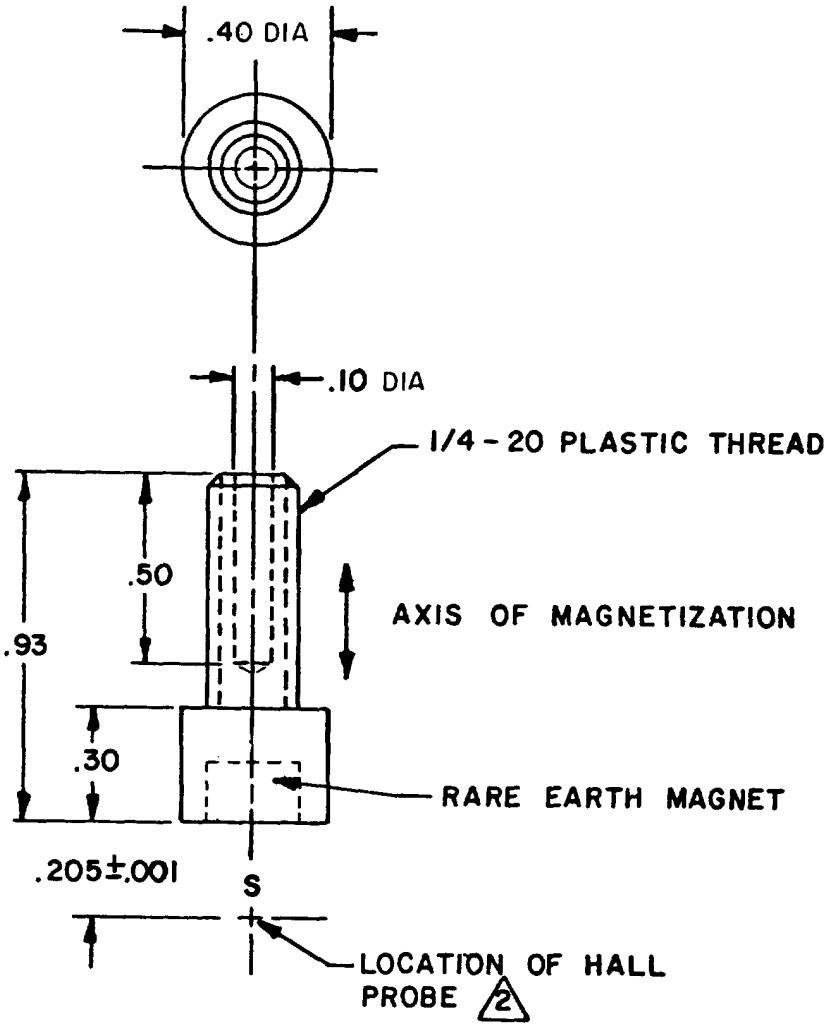

NOTES

1 THE MAGNET IS RARE EARTH COBALT MAGNETIZED AND CONDITIONED FOR OPERATION

2 READING IN GAUSS WITH F.W. BELL 620 GAUSSMETER AND PROBE STJ4-0402 AT .205±.001 INCHES FROM SOUTH POLE AT TEMPERATURE OF 24°±2°C SHALL BE 310 GAUSS MINIMUM

THIS DRAWING COVERS A PROPRIETARY ITEM AND IS THE PROPERTY OF MICRO SWITCH, A DIVISION OF HONEYWELL. THIS DRAWING IS NOT TO BE COPIED OR USED WITHOUT THE APPROVAL OF MICRO SWITCH.

THIRD ANGLE PROJECTION

CHARACTERISTICS	ELECTRICAL DATA	SCALE 2:1	DO NOT SCALE PRINT
	CONTACT ARRANGEMENT	UNLESS OTHERWISE SPECIFIED TOLERANCES ARE	
		ONE PLACE (.0)	±.030
		TWO PLACE (.00)	±.015
		THREE PLACE (.000)	±.005
		ANGLES	±
		WEIGHT	

CATALOG LISTING 106MG10 PAGE 1 OF 1
RELEASE NO. PR-7502
REPLACES
ISSUE 4
CHECK
CHECK
CHECK
CHECK
DRAWN GJW 29 MAY 96
FORMTEK

REVISIONS

A	CO-81006	GJW 29 MAY 96

Downloaded from Elcodis.com electronic components distributor