MICRO SWITCH
FREEPORT, ILLINOIS, U.S.A.
A DIVISION OF HONEYWELL
FED. MFG. CODE 91929

MAGNET – ACTUATOR

CATALOG LISTING
102MG11

THIS DRAWING COVERS A PROPRIETARY ITEM AND IS THE PROPERTY OF MICRO SWITCH, A DIVISION OF HONEYWELL. THIS DRAWING IS NOT TO BE COPIED OR USED WITHOUT THE APPROVAL OF MICRO SWITCH.

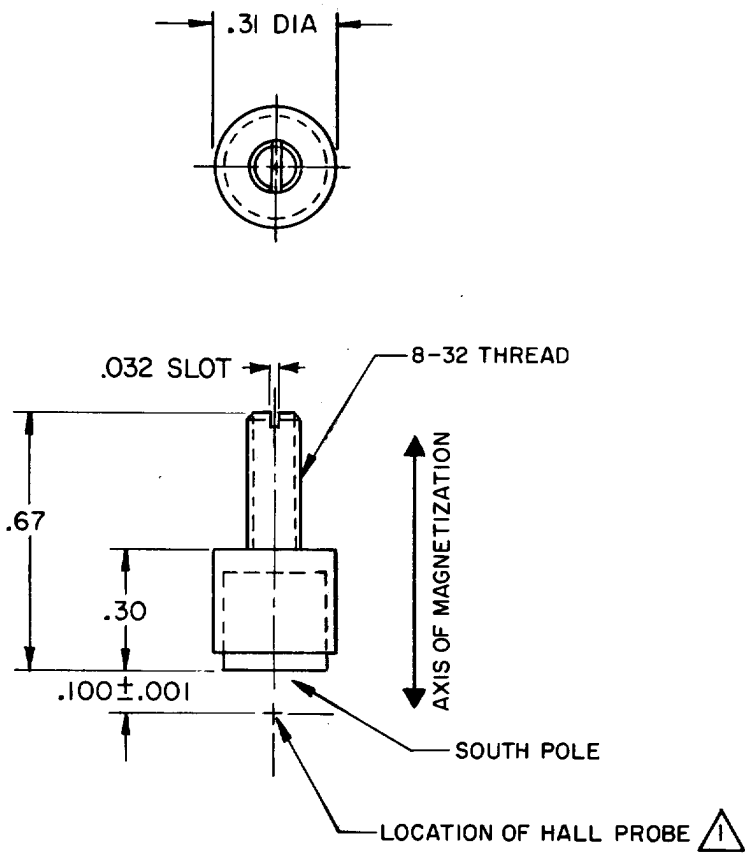

NOTES

1. READING IN GAUSS AT HALL ELEMENT OF GAUSS METER PROBE AT .100 ± .001 DISTANCE WILL BE 480 GAUSS MINIMUM AND 600 GAUSS MAXIMUM

SCALE 2 TO 1

DO NOT SCALE PRINT

UNLESS OTHERWISE NOTED
DIMENSIONS ARE IN INCHES

TOLERANCES ARE:

ONE PLACE	(.0)	±.030
TWO PLACE	(.00)	±.015
THREE PLACE	(.000)	±.005
ANGLES		±

WEIGHT

M 102MG11

DRAWING NUMBER

ISSUE X 5

REPLACES

RELEASE NO. PR-4188

CHECK

REVISIONS

A	CO35859	R E R 18 SEP 75
B	CO-45855	G R T 6 APR 79
C	CO 48033	KAG 17 JUL 80
D	CO-50564	KAG 10 DEC 81

CHECK RAM 5 JUNE 74

CHECK DAW 5 JUNE 74

DRAWN D B W 4 JUN 74

CO-50378-2A

Downloaded from Elcodis.com electronic components distributor