MICRO SWITCH
FREEPORT, ILLINOIS, U.S.A.
A DIVISION OF HONEYWELL
FED. MFG. CODE 91929

MAGNET–ACTUATOR

CATALOG LISTING
102MG15

THIS DRAWING COVERS A PROPRIETARY ITEM AND IS THE PROPERTY OF MICRO SWITCH, A DIVISION OF HONEYWELL. THIS DRAWING IS NOT TO BE COPIED OR USED WITHOUT THE APPROVAL OF MICRO SWITCH.

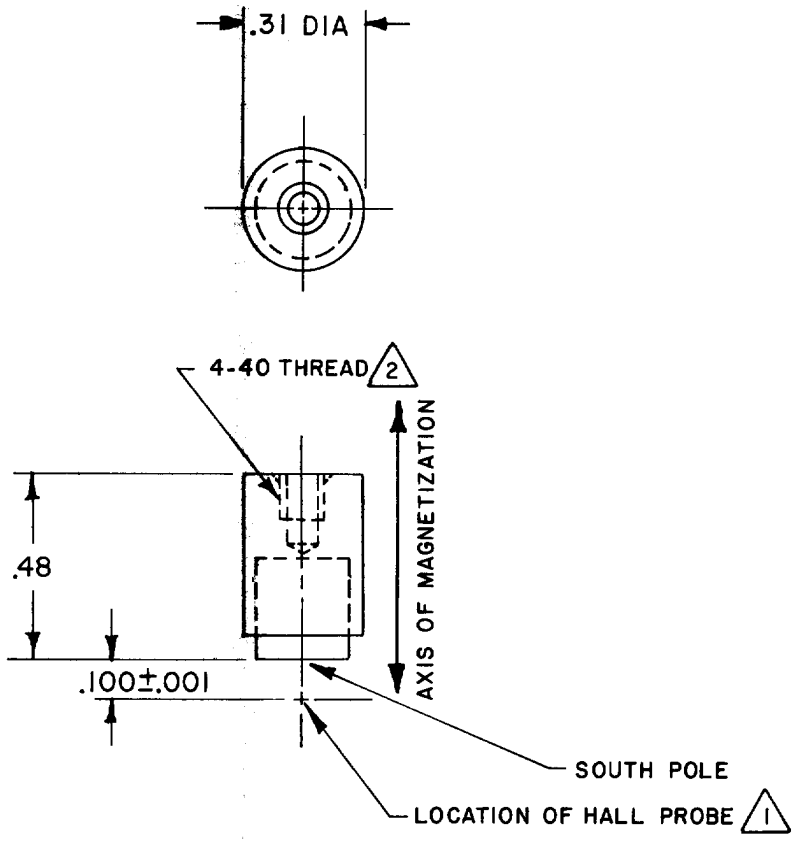

NOTES

1 - READING IN GAUSS AT HALL ELEMENT OF GAUSS METER PROBE AT .100±.001 DISTANCE WILL BE 480 GAUSS MINIMUM & 600 GAUSS MAX.

2 3 1/2 FULL THREADS MINIMUM

SCALE 2:1

DO NOT SCALE PRINT

UNLESS OTHERWISE NOTED
DIMENSIONS ARE IN INCHES

TOLERANCES ARE:

ONE PLACE	(.0)	±.030
TWO PLACE	(.00)	±.015
THREE PLACE	(.000)	±.005
ANGLES		±1°

WEIGHT

REPLACES
RELEASE NO. PR-7836
DRAWING NUMBER M 102MG15
ISSUE X 3

REVISIONS

A	CO-50564	K AG 10 DEC 81
B	C064093	J A S 24 AUG 88

CHECK
CHECK
CHECK 23APR79 CEB
CHECK
DRAWN 20 APR 79 CSM

CO-50378-2A

Downloaded from Elcodis.com electronic components distributor