MICRO SWITCH
FREEPORT ILLINOIS, U.S.A
A DIVISION OF HONEYWELL
FED. MFG. CODE 91929

PACKET

CATALOG LISTING
6PA138-EX

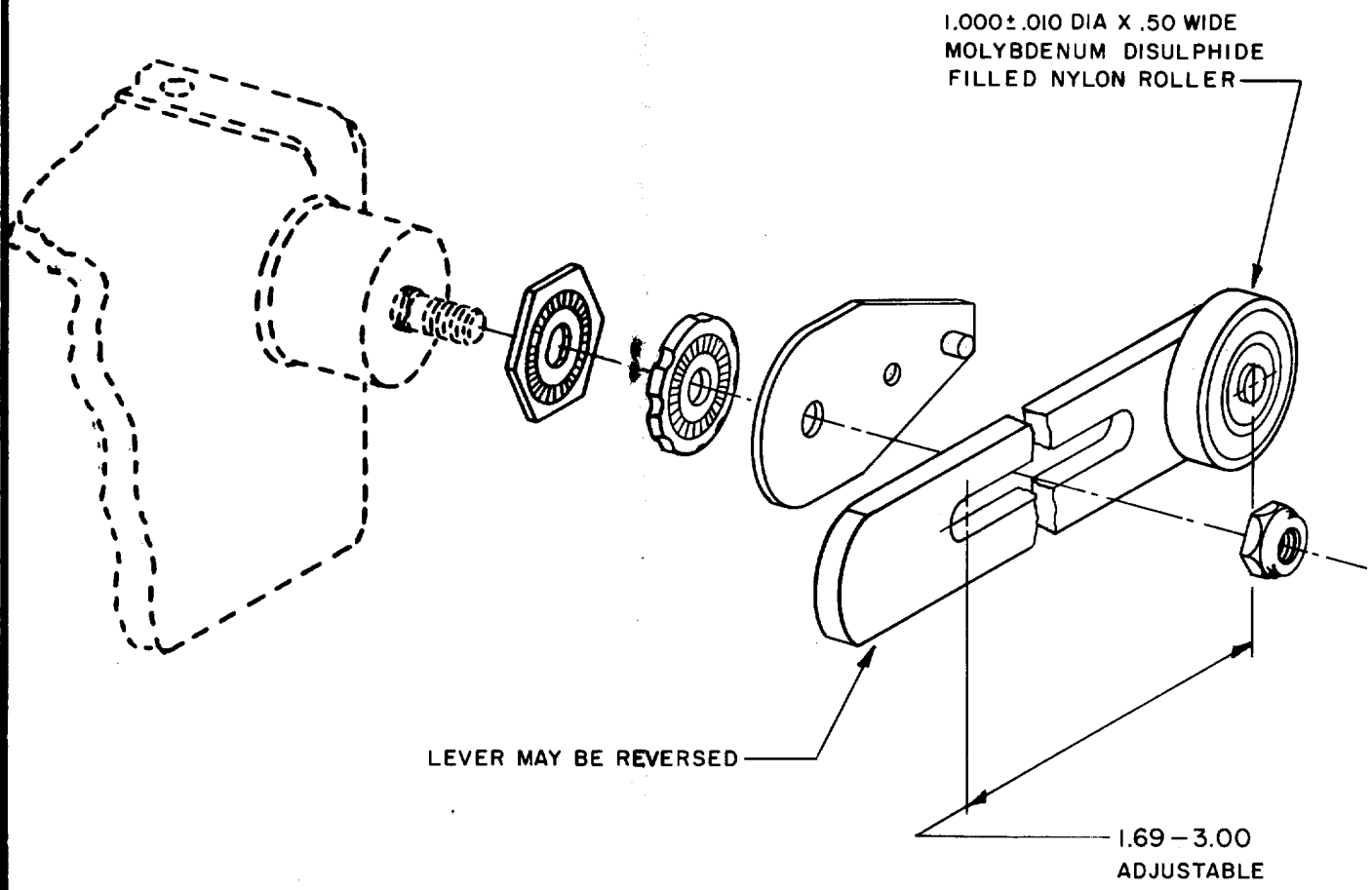

NOTE-
1-PARTS FURNISHED UNASSEMBLED IN BULK AS A PACKET

THIS DRAWING COVERS A PROPRIETARY ITEM AND IS THE PROPERTY OF MICRO SWITCH, A DIVISION OF HONEYWELL. THIS DRAWING IS NOT TO BE COPIED OR USED WITHOUT THE APPROVAL OF MICRO SWITCH.

CHARACTERISTICS	ELECTRICAL DATA	SCALE
	CONTACT ARRANGEMENT	DO NOT SCALE PRINT
		UNLESS OTHERWISE NOTED DIMENSIONS ARE IN INCHES TOLERANCES ARE: ONE PLACE (.0) ±.030 TWO PLACE (.00) ±.015 THREE PLACE (.000) ±.005 ANGLES ±1°
		WEIGHT

DRAWN GFS 1 OCT 68 CHECK LSD 2 OCT 68 CHECK GCH 2 OCT 68 CHECK

REVISIONS
A PR-1522 SRH 9 OCT 70

ISSUE X2 DRAWING NUMBER M 6PA138-EX RELEASE NO. PR-1522 REPLACES

FO-50378-1A

Downloaded from Elcodis.com electronic components distributor