MICRO SWITCH
A DIVISION OF MINNEAPOLIS-HONEYWELL REGULATOR COMPANY
FREEPORT, ILLINOIS
FED. MFR. CODE 91929

ACTUATOR – SWITCH

CATALOG LISTING
MCD2711H

5

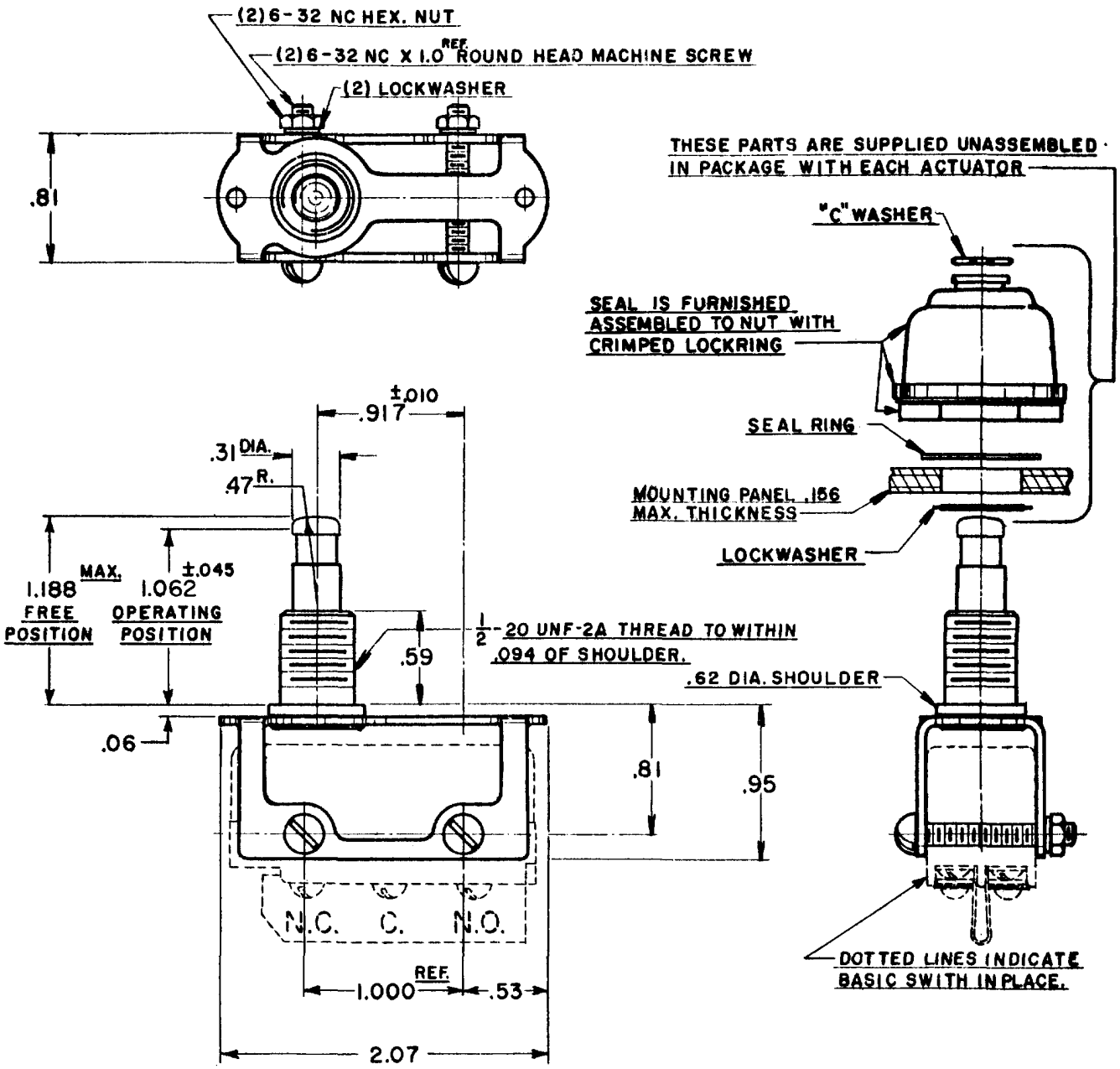

NOTE—
1—SCREWS, NUTS, AND LOCKWASHERS FURNISHED UNASSEMBLED.

THIS DRAWING COVERS A PROPRIETARY ITEM AND IS THE PROPERTY OF MICRO SWITCH, A DIVISION OF HONEYWELL. THIS DRAWING IS NOT TO BE COPIED OR USED WITHOUT THE APPROVAL OF MICRO SWITCH.

CHARACTERISTICS	ELECTRICAL DATA		SCALE FULL
FULL OVERTRAVEL FORCE —— 6 LBS. MAX.	CONTACT ARRANGEMENT	BREAK DISTANCE	DO NOT SCALE PRINT
OVERTRAVEL ———————— .141 MIN.			UNLESS OTHERWISE SPECIFIED DIMENSIONS ARE IN INCHES TOLERANCES ARE: ONE PLACE (.0) ±.030; TWO PLACE (.00) ±.015; THREE PLACE (.000) ±.005; ANGLES ±
			WEIGHT

(M) MCD2711H ISSUE 2
REPLACES
RELEASE NO.
MCD2711H
PAGE 1 OF 1
M
DRAWING NUMBER
9
ISSUE

REVISIONS		
A	CO 8520	R. L. Z. 21 SEPT 56
B	CORRECT.	R. L. Z. 14 NOV. 56
C	CO13082	O M W 11 MAR 59
D	CO38152	K P K 24 JAN 77
E	CO74163	D H D 21 APR 93
F	CO-92428	P A F 19 MAY 98
G	0040139	SS 29MAY08

CHECK
CHECK
CHECK
CHECK
DRAWN R. L. Z. 21 SEPT. 56
RASTER
FO-50378

Downloaded from Elcodis.com electronic components distributor