MINI MIC REC. AND TAB CONTACT FOR SINGLE WIRE SEALING

SCOPE

This specification covers the requirements for application of Mini Mic Rec. and Tab Contacts.
P/Ns involved are listed in the table of Fig. 7.

GENERAL

These contacts are suitable for 0.35-2.5sqmm wire, with single wire seals.

Each wire is inserted into a discrete wire seal before to be crimped into the contact.

The insulation barrel is crimped so that the wire seal is gripped in order to avoid any movement of the seal.

The contacts are suitable for single wire only.

The indications on the figures are valid for both receptacle and tab contacts.

1. CRIMPING

The following information contains nomenclature, crimping conditions, crimp data for mini-applicators, insertion of wire seals on cables, mending or replacement of parts and checks.

REV LTR	REVISION RECORD	DR	DATE
F2	REVISED FOR ET00-0416-99	M.P. / R.D.	
F1	REVISED ET00-0084-98	M.G.	16 FEB 1999
F	ET 00 0488-9 >		
E	REVISED EC ET00-0154-97	P.S.	3/4/97
D	REVISED PER ECN ET00-0294-95	S.S. G.C.	12 DEC 1995
—	—		
C	Added W.R. 1,5÷2,5sqmm	5-11-93 C.P.	ET00 0138-93
B	Up-dated & RELEASED	23-10-92 AB	ECN I3168
A	Revised (ECN I3009)	O.C.	19-2-92

DRAWN O. CANUTO 19th Dec. 91
CHK 19th Dec 1991
APP. 23/10/92

AMP ITALIA S.p.A.
Corso F.lli Cervi, 15
COLLEGNO (TORINO)

LOC	NO	REV.
I	114-20045	F2

NAME: APPLICATION SPECIFICATION FOR MINI MIC CONTACT WITH SINGLE WIRE SEALING

SHEET 1 OF 6

YOU ON CONDITION THAT NO FURTHER DISCLOSURE IS MADE BY YOU TO OTHER THAN AMP PERSONNEL WITHOUT WRITTEN AUTHORIZATION FROM AMP ITALIA S.p.A.

Downloaded from Elcodis.com electronic components distributor

1.1 NOMENCLATURE

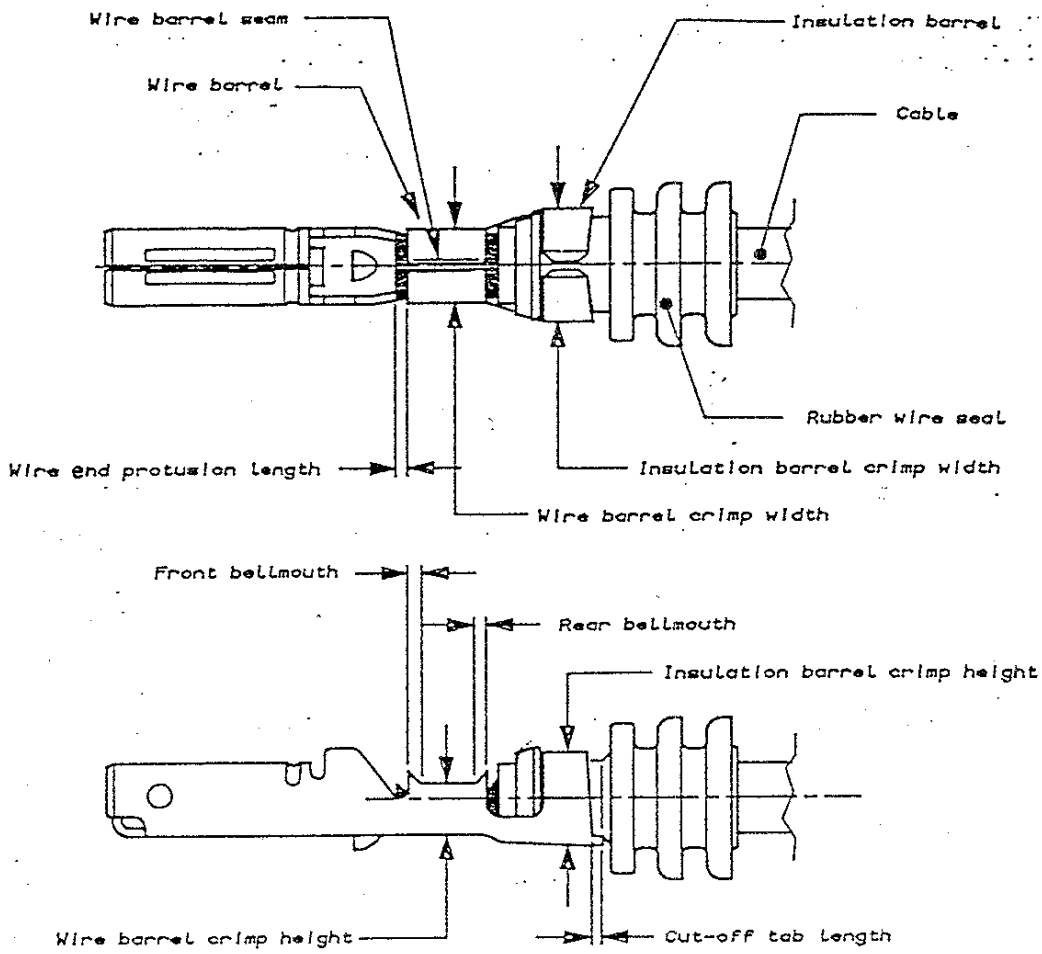

Fig. 1

2. CRIMPING CONDITIONS

Refer to nomenclature (Par. 1.1) see Fig. 1 Fig. 2 and Fig. 3.

1.	Cut-off tab length	0,3 mm max
2.	Front bellmouth	0,10 x 45° max
	Rear bellmouth	0,25x60° min
3.	Bend up	5° max
	Bend down	5° max
	Bend right	5° max
	Bend left	5° max
	Rolling	5° max
4.	Cable end protrusion (brush length)	0,2 to 0,7 mm
5.	Insulation stripping length	3,0 to 3,5 mm

6. Wire barrel seam must be neatly closed.

Downloaded from Elcodis.com electronic components distributor

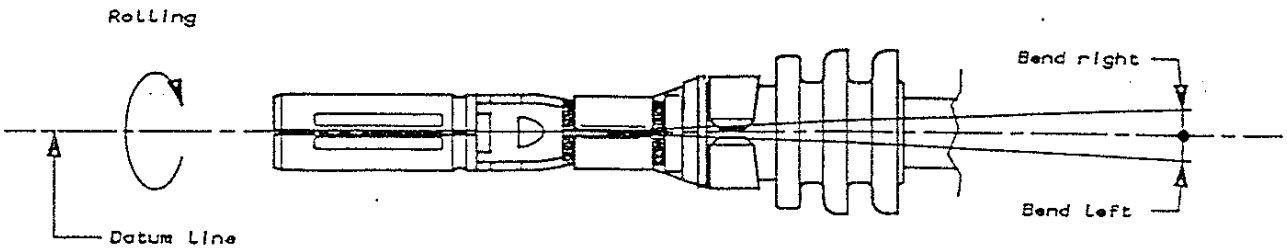

Fig. 2

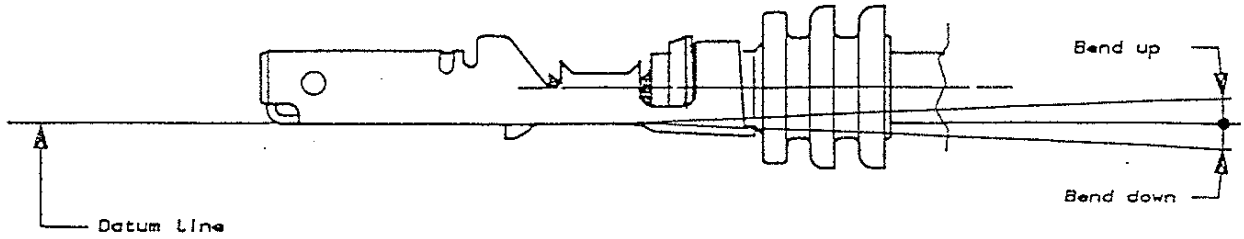

Fig. 3

3. CRIMP DATA

3.1 For applicator crimping see Fig. 7.

4. INSERTION OF RUBBER WIRE SEAL ON THE CABLE

When the rubber seal is installed on cable, the end of the cable insulation shall be positioned from the edge of the rubber seal, as shown in Fig. 4. This length is usually regardless of cable size.

NOTE: Seals are supplied lubricated. This lubrication must not be removed.

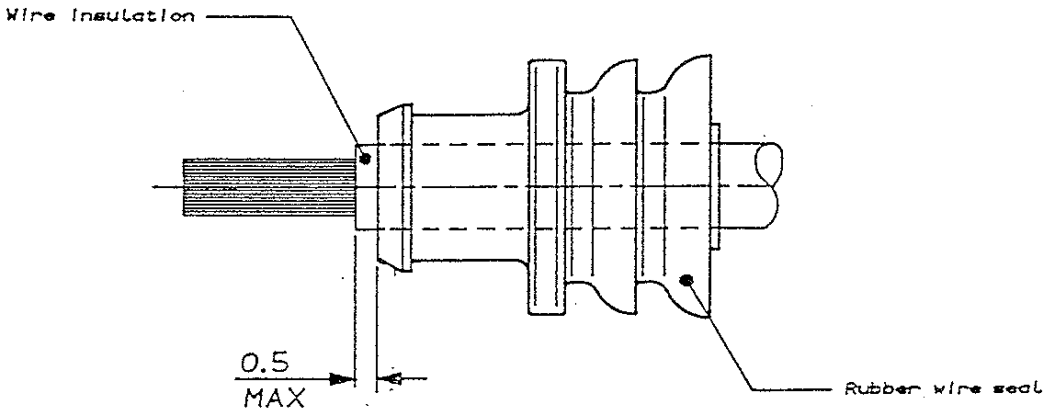

Fig. 4

Downloaded from Elcodis.com electronic components distributor

5. CORRECTION OR REPLACEMENT OF PARTS

When defects and/or improper applications are found on parts to be installed, as shown in Fig. 5, rework to set up properly, or replace with new part.

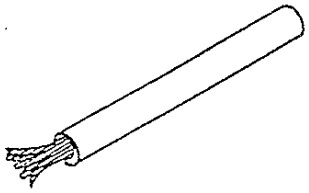

The end of the cut wire shall appear neat without any bend of stranded conductor

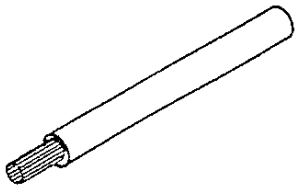

The conductor shall be free from nick, cut and scrape.

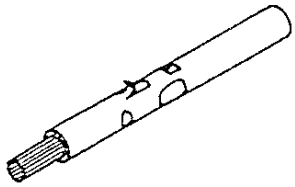

The wire insulation must have smooth surface in a round form without damage, groove or recessed surface.

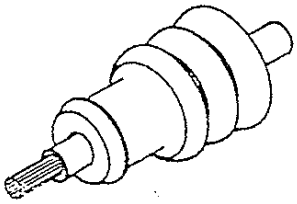

The end of the wire shall be straight without bend and untidiness after insertion of the wire seal.
The bent wire seal be checked out

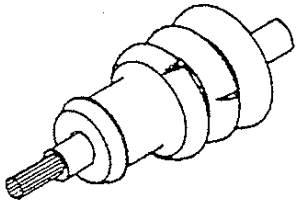

The flanges of the rubber seal shall be free from cut and damage.
Any seal having such defects shall be discarded, and replaced with new part.

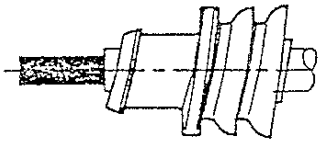

Insertion of rubber seal shall be done straightly and evenly. If flanges are in tilt condition, the plug must be corrected so that flanges are perpendicular to contact center line.

Fig. 5

Downloaded from Elcodis.com electronic components distributor

5.1 After crimping, the part of the cable insulation that is inside the seal shall be in good condition and within the requirements shown in Figure 5.
Check by visual inspection in the transition area (between wire and insulation barrel), as indicated in Figure 6.

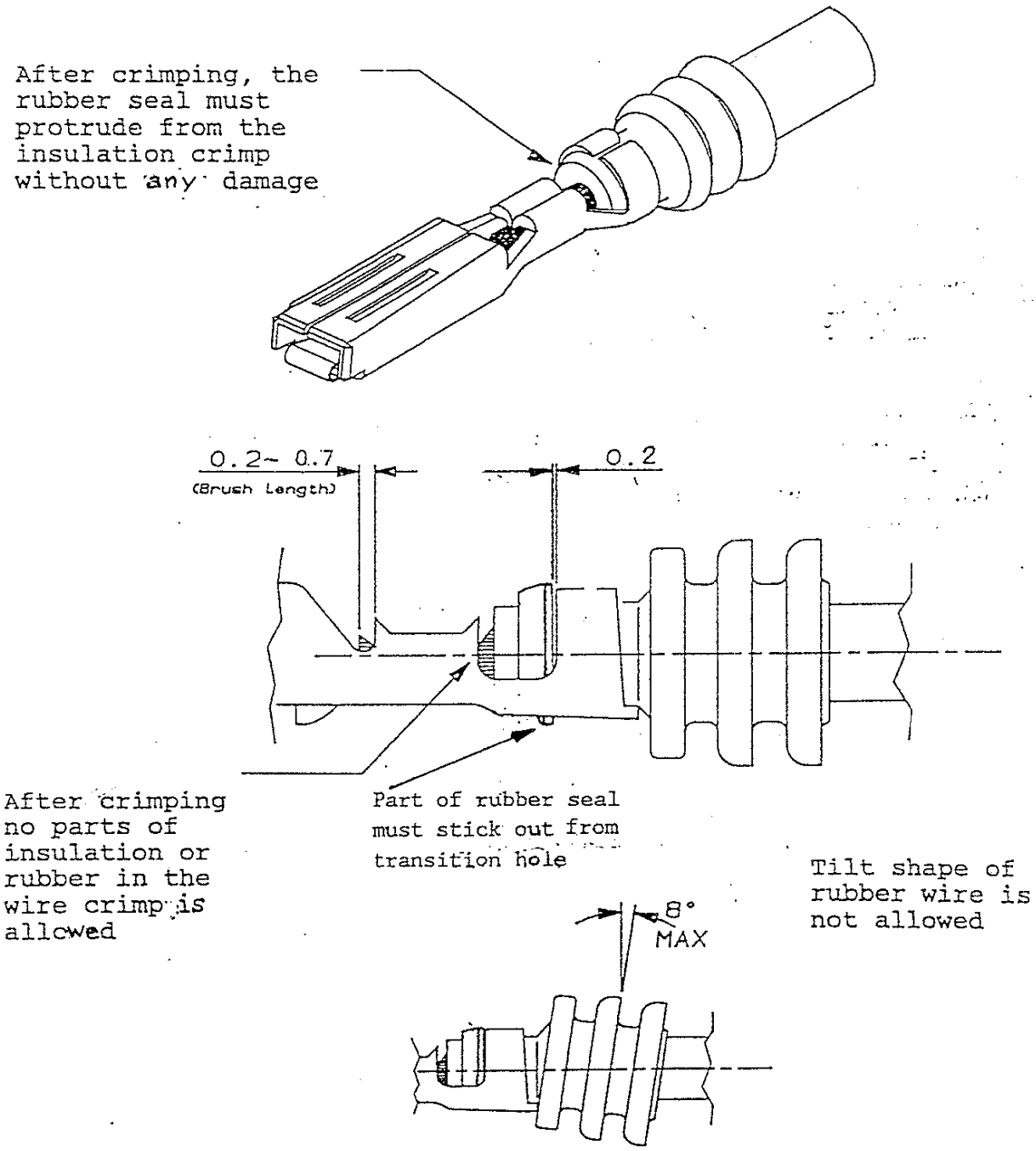

Fig. 6

5.2 Crimped contacts should appear as illustrated in Par. 1.1 (Nomenclature).

Downloaded from Elcodis.com electronic components distributor

PART NO.	WIRE SIZE mmq	INS. DIA. FOR WIRE SEAL 281934-2 (TABEL. FIAT 91107/03 E 91107/05)	INS. DIA. FOR WIRE SEAL 281934-3 (TABEL. FIAT 91107/03 E 91107/05)	INS. DIA. FOR WIRE SEAL 281934-4 (TABEL. FIAT 91107/03 E 91107/05)	STRIP LENGTH	WIRE BARREL CRIMP			INSULATION BARREL CRIMP		
						CRIMPER HEIGHT ±0.05	CRIMPER WIDTH (REF)	CRIMPER TYPE	CRIMPER WIDTH (REF.)	CRIMPER TYPE	CRIMPER HEIGHT (REF.)
REC. CONTACT 282110-1	0.75 1.0 1.5	1.8-2.4	2.6-3.3	---	3.0-3.5	1.14 1.22 1.40	2.28	F	3.68	O	3.75 3.80 4.00
REC. CONTACT 282403-1	0.35 0.5	---	---	1.4-1.7	3.0-3.5	1.02 1.09	1.78	F	3.68	O	3.70 3.75
REC. CONTACT T 282466-1	1.5 2.5	1.8-2.4	2.6-3.3	---	3.5-4.0	1.72 1.98	2.28	F	4.19	O	4.00 4.40

PART NO.	WIRE SIZE mmq	INS. DIA. FOR WIRE SEAL 281934-2 (TABEL. FIAT 91107/03 E 91107/05)	INS. DIA. FOR WIRE SEAL 281934-3 (TABEL. FIAT 91107/03 E 91107/05)	INS. DIA. FOR WIRE SEAL 281934-4 (TABEL. FIAT 91107/03 E 91107/05)	STRIP LENGTH	WIRE BARREL CRIMP			INSULATION BARREL CRIMP		
						CRIMPER HEIGHT ±0.05	CRIMPER WIDTH (REF)	CRIMPER TYPE	CRIMPER WIDTH (REF.)	CRIMPER TYPE	CRIMPER HEIGHT (REF.)
TAB CONTACT 282109-1	0.75 1.0 1.5	1.8-2.4	2.6-3.3	---	3.0-3.5	1.34 1.45 1.52	2.28	F	3.68	O	3.75 3.80 4.00
TAB CONTACT 282404-1	0.35 0.5	---	---	1.4-1.7	3.0-3.5	0.99 1.04	2.03	F	3.68	O	3.70 3.75
TAB CONTACT 282465-1	1.5 2.5	1.8-2.4	2.6-3.3	---	3.5-4.0	1.72 1.98	2.28	F	4.19	O	4.00 4.40

PART NO.	WIRE SIZE mmq	INS. DIA. (TABEL. IVECO 11-8140) (PHASE 2)	INS. DIA. (TABEL. FIAT 91107/03 E 91107/05) (PHASE 3)	STRIP LENGTH	WIRE BARREL CRIMP			INSULATION BARREL CRIMP			
					CRIMPER HEIGHT ±0.05	CRIMPER WIDTH (REF)	CRIMPER TYPE	CRIMPER WIDTH (REF.)	CRIMPER TYPE	CRIMPER HEIGHT (REF PHASE 2)	CRIMPER HEIGHT (REF PHASE 3)
TAB CONTACT 284262-1	0.35 0.5 0.75	--- 1.8-2.0 ---	1.4-1.45 1.6-1.7 1.9-2.0	3.0-3.5	0.99 1.04 1.34	2.03	F	3.68	F	--- 2.20 ---	2.00 2.10 2.15
TAB CONTACT 284263-1	1.0 1.5	2.2-2.4 2.8 MAX	2.0-2.1 2.3-2.4	3.0-3.5	1.45 1.52	2.28	F	3.70	F	3.55 3.75	3.25 3.30
	0.5+0.5	1.8-2.0+ 1.8-2.0	---		1.45					3.70	---
	1.0+0.5	2.2-2.4+ 1.8-2.0	---		1.52					4.00	---

FIG. 7

"Dimensions are in mm"

Downloaded from Elcodis.com electronic components distributor