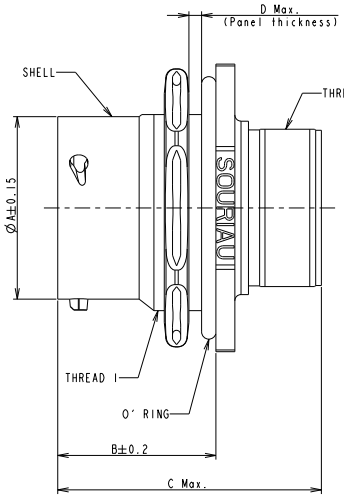

MATING FACE

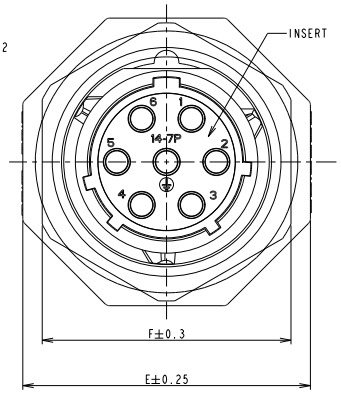

PANEL CUT OUT

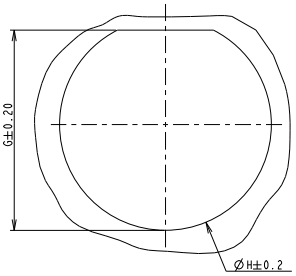

MATERIAL :

Shell:Polyamid UL94 V-0
Insert:Polyalid UL94 V-0
Seal gasket : Sealing IP68/69K : Silicone
O'ring:nitril
Nut:Aluminium alloy black anodized

PERFORMANCE CHARACTERISTICS :

Operating temperature:-40°C up to 105°C
Insulation resistance:5000 MΩmin
Test potential:2000 Vrms for #16 layout and 1500Vrms for #20 layout
Corrosion salt spray:500 hours
Durability:250 matings and unmatings
Sealing in mated conditions:
- IP68 1 bar during 1 week : immersion under 10 m of water. (IEC 60529)
- IP69K : exposure to high pressure water of cleaning equipement(DIN 40050)

NOTES :

-1-Contact to be ordered separately :refer to TRIM TRIO catalog
-2-Colored ring to be ordered separately refer to customer drawing C005-UTS1-A
-3-Insert arrangements:refer to : C008-UTS1-A(Female insulator)
UTO-CONTACT-L-C02(Female insulator)
UTOW-CONTACT-L-C02(Female insulator)

C007-UTS1-A(Male insulator)
UTO-CONTACT-L-C01(Male insulator)
UTOW-CONTACT-L-C01(Male insulator)

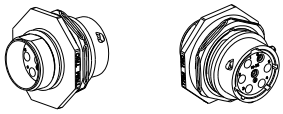

UTS7 14 7 P XX

Receptacle UTS7
Shell size
Insert arrangement (See nota 3)
P = Male contact (See detail 1)
or
S = Female contact (See detail 2)
Specification

SHELL SIZE	THREAD 1	THREAD 2	ØA±0.15	B±0.2	C MAX.	D MAX.	E±0.25	F±0.3	G±0.20	ØH±0.2
10	11/16 24 UNEF CLASS 2A	9/16 24 UNEF CLASS 2A	14.90	19.30	33.90	3.20	27.00	22.20	16.50	17.70
12	7/8 20 UNEF CLASS 2A	11/16 24 UNEF CLASS 2A	19.00	19.30	33.90	3.20	31.80	27.00	21.20	22.50
14	1"20 UNEF CLASS 2A	13/16 20 UNEF CLASS 2A	22.20	19.30	33.90	3.20	34.90	30.20	24.30	25.70
18	1"1/4 18 UNEF CLASS 2A	1"1/16 18 UNEF CLASS 2A	28.5	19.30	33.90	3.20	41.30	36.60	30.60	32.00

MALE CONNECTOR
(Detail 1)

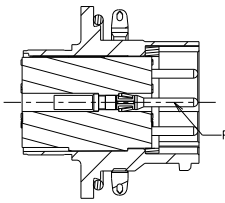

FEMALE CONNECTOR
(Detail 2)

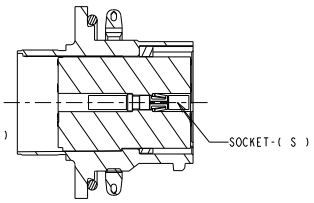

OPTIONAL PARTS

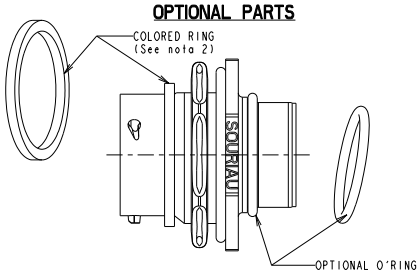

CUSTOMER DRAWING

ISS	DATE	Latest modification - by:		MOD N°
B	05/02/08	-- Add shell size 18		--

Designed by: SORIN V. Date: 05/04/06 Type of drawing: Customer
Checked by: SEE DISTRIBUTION LIST Date: SEE DISTRIBUTION LIST

TITLE: JAM NUT RECEPTACLE UTS CONNECTOR

Scale 3/1 | General angular Tolerances: ± -- | MATERIAL -- | General linear Tolerances ±0.1 | General machining surface texture Ra 3.2 | Geometrical Tolerances See NF E 04-552 | PROJECT UTS1

SOURIAU Connection Technology
SOURIAU
Route Nationale 23
72470 CHAMPAGNE
Tel. (33)02.43.54.35.00

This document is the property of SOURIAU. It must not be reproduced or communicated without permission

FORMAT A2 | SOURIAU DRG N° C001-UTS1-A | SHEET 1/1

Downloaded from Elcodis.com electronic components distributor