Description:	RJ12 MOD Plug 50"U,SOL/STR,FLT
Part No:	32-5996UL
Application:	Modular Plug
Crimp Tool:	N/A
Insulation Resistance:	1000 Ohms
Frequency Range:	N/A
Material:	Housing Polycarbonate
	Contact Phosphor bronze Gold plated
	Insert bar Polycarbonate
RoHS Compliance:	Yes
Technical Detail:	N/A

受控 CONTROLLED DOCUMENT					
编号 P/N	32-5996UL-CUST	版本 Rev	01	日期 Rel'd Date	SEP 14,09

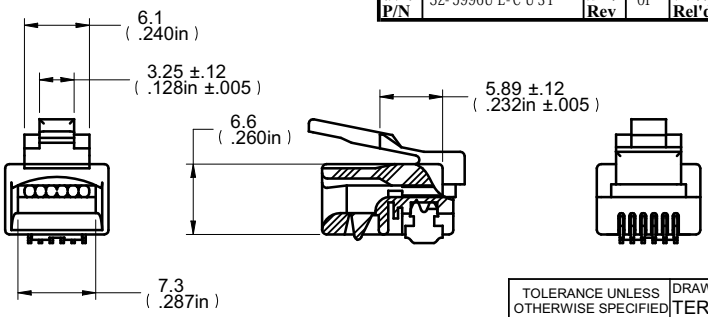

DIM OUTLINE

DRAWING NO.
32-5996UL- CUST

REVISIONS

01	OFFICIAL RELEASE					
	08-23-09	T W	B Y	T		Betty 2009.09.08 09:30:14 +08'00'

CUSTOMER COPY

TOLERANCE UNLESS OTHERWISE SPECIFIED		DRAWN BY TERRY.W	DATE 08-23-09
DECIMALS	mm	CHECKED BY BETTY.YU	DATE 08-23-09
X	± 0.5		
X.X	± 0.3	APPROVED BY THOMAS	DATE 08-23-09
X.XX	± 0.1		
ANGLES	± 0.5°	U/M mm	

THIS DRAWING WAS PRODUCED BY COMPUTER, DO NOT SCALE DRAWING OR UPDATE MANUALLY.

EMERSON Network Power — Connectivity Solutions

TITLE
RJ12 MOD PLUG 50"U,SOL/STR,FLT

SHEET	DRAWING NO.	SIZE
1 OF 1	32-5996UL-CUST	A

Downloaded from Elcodis.com electronic components distributor