Last Update: 12-28-05 **Ref. #**: MS-100787

Dimensions: mm (In.)

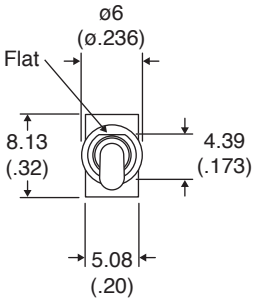

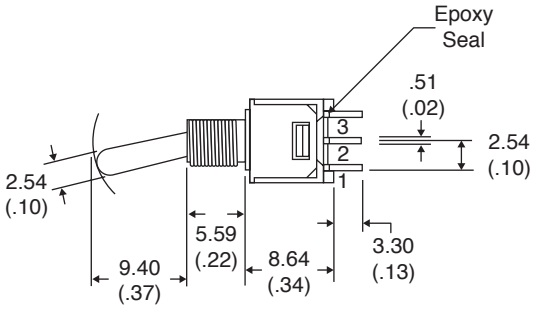

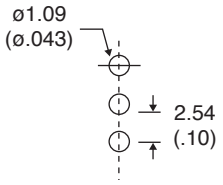

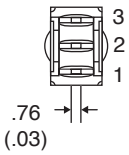

POS.1	POS.2	POS.3
ON	OFF	ON
2-3	OPEN	2-1
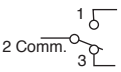		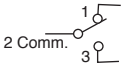

Electrical Specifications:

- Electrical Life: 30,000 make-and-break cycles at full load
- Contact Resistance: 20mΩ max. initial @ 2-4VDC 100mA
- Insulation Resistance: 1,000MΩ min.
- Dielectric Strength: 1,000 V RMS@ sea level.
- Rating: 1A / 250 VAC; 3A / 120 VAC or 28 VDC

Mechanical Specifications:

- Operating Temperature: -30° C to +85° C

Note:

- RoHS Compliant by Exemption

Materials:

- Case: Diallyl phthalate (DAP) (UL94v-0)
- Acutuator: Brass, chrome plated.
- Bushing: Brass, nickel plated.
- Housing: Stainless steel.
- Switch Support: Brass, tin plated.
- Terminal/Contact: Brass, silver plated.

Toggle Switch

108-2MS3T1B1M2QE-EVX

Mountain Switch

Available from Mouser Electronics www.mouser.com 1-800-346-6873

Specifications are subject to change without notice. No liability or warranty implied by this information. Environmental compliance based on producer documentation.

Downloaded from Elcodis.com electronic components distributor