C2.4

MICRO SWITCH
A DIVISION OF MINNEAPOLIS-HONEYWELL REGULATOR COMPANY
FREEPORT, ILLINOIS
FED. MFR. CODE 91929

ACTUATOR-SWITCH

"12MA" SERIES
CHART 2

S

PLASTIC BUTTON COLOR	ACTUATOR-SWITCH CAT. LIST.
BLACK	12MA5
RED	12MA6
GREEN	12MA7

THIS DRAWING COVERS A PROPRIETARY ITEM AND IS THE PROPERTY OF MICRO SWITCH, A DIVISION OF HONEYWELL. THIS DRAWING IS NOT TO BE COPIED OR USED WITHOUT THE APPROVAL OF MICRO SWITCH.

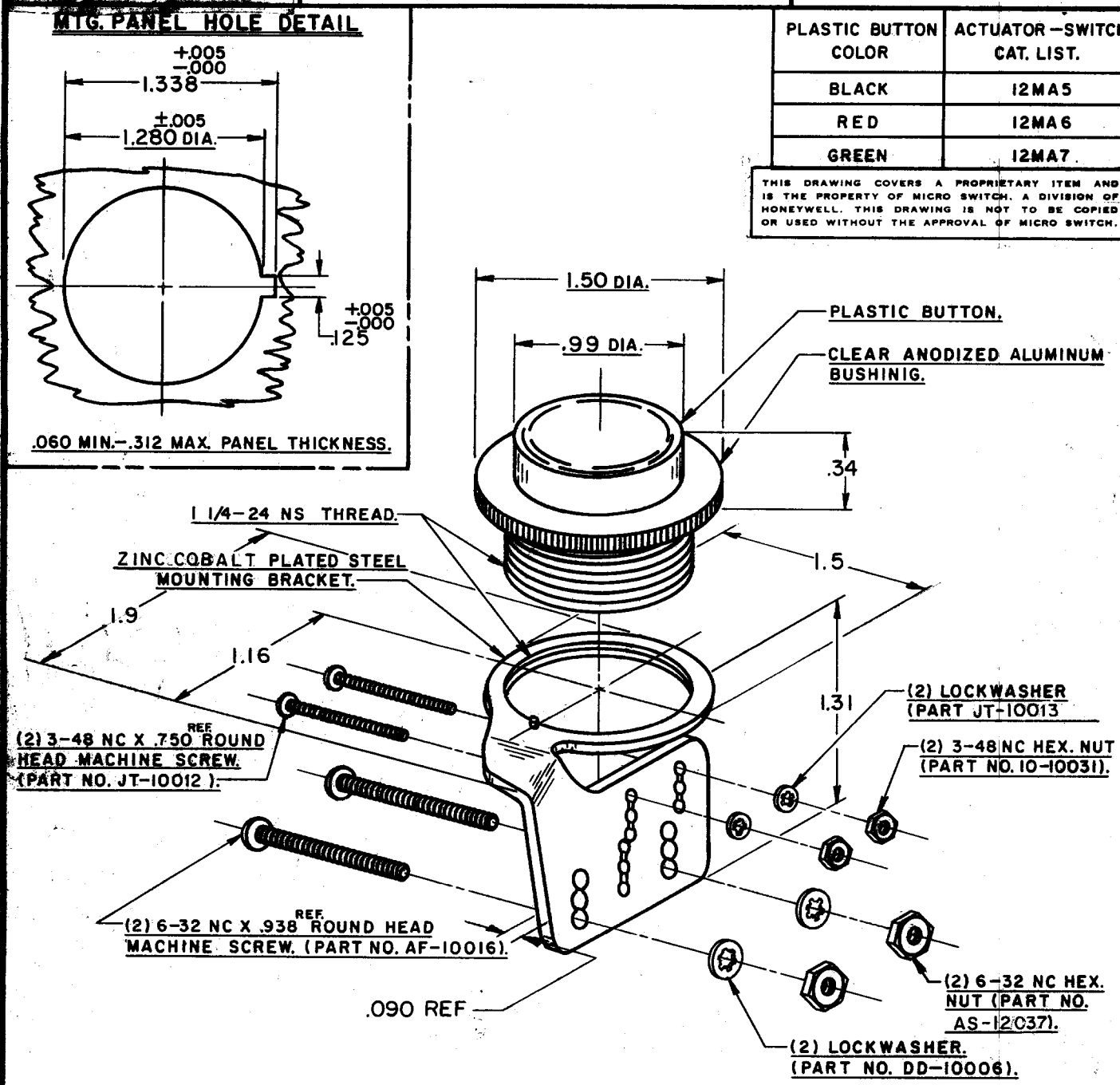

NOTE—

1—NOT SUITABLE FOR USE WITH ITBI-3 TYPE BASIC.
2—TWO COMPLETE SETS OF SCREWS, NUTS AND WASHERS FURNISHED UNASSEMBLED (CUSTOMER WILL SELECT PROPER SET).
3—THE VARIOUS PANEL THICKNESSES MAY BE ACCOMMODATED WITH THIS ACTUATOR BY PROPER SELECTION OF BASIC SWITCH MOUNTING HOLES.

CHARACTERISTICS	ELECTRICAL DATA	SCALE — FULL
	CONTACT ARRANGEMENT	DO NOT SCALE PRINT

UNLESS OTHERWISE SPECIFIED
DIMENSIONS ARE IN INCHES
TOLERANCES ARE:

ONE PLACE	(.0)	±.030
TWO PLACE	(.00)	±.015
THREE PLACE	(.000)	±.005
ANGLES		±

WEIGHT

M "12MA" SERIES CHART 2
DRAWING NUMBER
ISSUE
REPLACES
RELEASE NO. SR 7525
CHECK
REVISIONS
A C013074
M.B.F. 2 SEPT 58
B C013992
MBF 18 AUG 59
C C014480
L S D 2 MAR 60
D C014441
L S D 31 MAR 60
E C018474
L E B 26 SEPT 63
F CO 37516
GL H 20 SEPT 76
G C078546
DLT 1 SEP 94
CHECK ACE 24 MAY 58
CHECK GCH 2 JUNE 58
CHECK
DRAWN K.A.F. 22 MAY 58
FO-50378

Downloaded from Elcodis.com electronic components distributor