Last Update: 2-26-07 **Ref. #:** MS-101155

Dimensions: mm (in.)

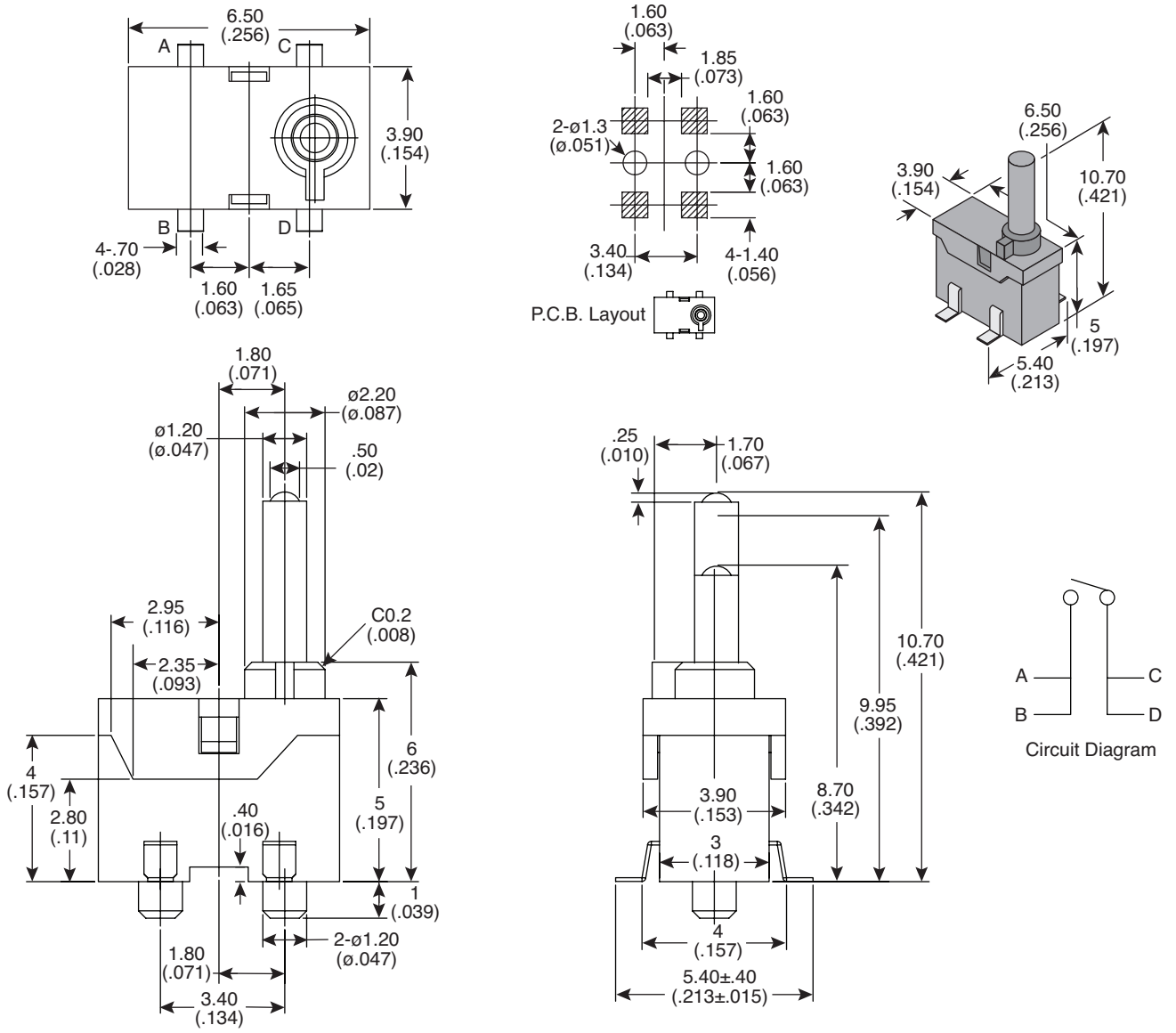

Electrical Specifications:

- Rating: 5mA/5V DC
- Contact Resistance: 500mΩ Max.
- Insulation Resistance: 100MΩ Min.
- Dielectric Strength: 250 VAC (50Hz or 60Hz) shall be applied across terminals and cover for 1 minute
- Electrical Life: 50,000 cycles

Mechanical Specifications:

- Operating Temperature: -20° C to +70° C.
- Operation Force: 30gf Max.
- Storage Temperature: -30° C to +80° C
- Stroke: 2mm Max.

Note:

- RoHS Compliant

Detector Switch
104-TE1412-EV

Mountain Switch

Available from Mouser Electronics www.mouser.com 1-800-346-6873

Specifications are subject to change without notice. No liability or warranty implied by this information. Environmental compliance based on producer documentation.

Downloaded from Elcodis.com electronic components distributor