MICRO SWITCH
FREEPORT ILLINOIS, U.S.A
A DIVISION OF HONEYWELL
FED. MFG. CODE 91929

SWITCH–BASIC

V3-347

CK-D3380

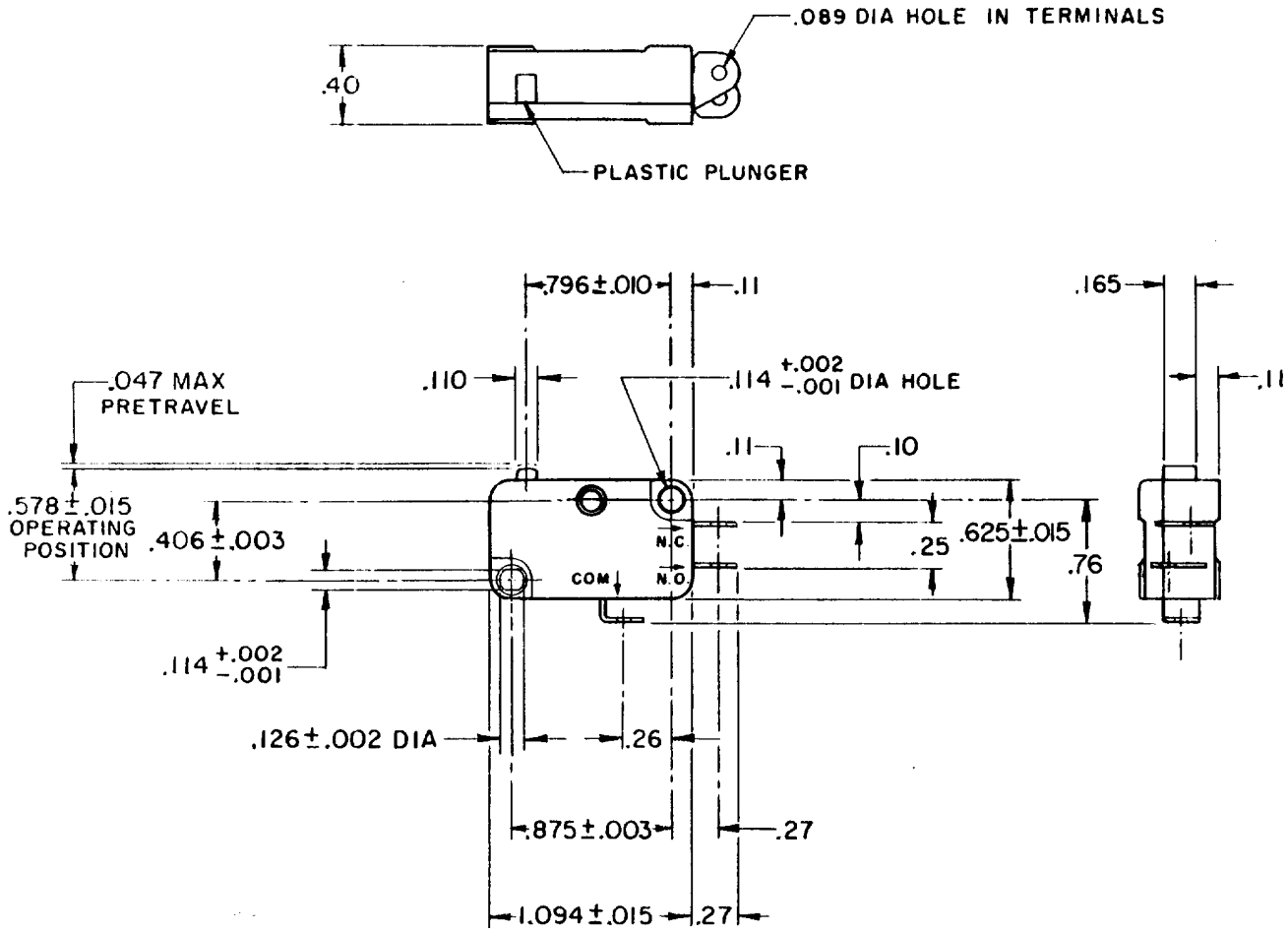

NOTES
1 - TERMINALS ARE PLATED FOR SOLDERING
2 - IN INSPECTION, DO NOT BURN OUT - GOLD CONTACTS
3 - IN INSPECTION, DO NOT EXCEED 10 VDC, .1A RESISTIVE LOAD
4 - INSPECT SWITCH RESISTANCE PER CONTROL PLAN

THIS DRAWING COVERS A PROPRIETARY ITEM AND IS THE PROPERTY OF MICRO SWITCH, A DIVISION OF HONEYWELL. THIS DRAWING IS NOT TO BE COPIED OR USED WITHOUT THE APPROVAL OF MICRO SWITCH.

CHARACTERISTICS

OPERATING FORCE - - - - - - 8 OZ MAX
RELEASE FORCE - - - - - - - 2 OZ MIN
RELEASE TRAVEL - - - - - - - .007 MIN
DIFFERENTIAL TRAVEL - - - - .006 – .016
OVERTRAVEL - - - - - - - - - .040 MIN
FREE POSITION - - - - - - - .625 MAX

ELECTRICAL DATA

CONTACT ARRANGEMENT
S P D T

–L22–

1A–125 VAC

SCALE FULL
DO NOT SCALE PRINT

UNLESS OTHERWISE NOTED
DIMENSIONS ARE IN INCHES
TOLERANCES ARE

ONE PLACE	(.0)	± .030
TWO PLACE	(.00)	± .015
THREE PLACE	(.000)	± .005
ANGLES		±

WEIGHT

V3-347 PAGE 1 OF 1
RELEASE NO. PR-3878
REPLACES
DRAWING NUMBER
ISSUE 8

REVISIONS

A	PR-3878	DJW 14 JAN 74
A	CO 38993	TMM 4 AUG 77
B	CO 59921	SMA 29 SEPT 86
C	CO 76501	DCS 8 MAR 94
D	CO 77116	DCS 18 APR 94
E	CO-93311	TSM 15 OCT 98
F	0005782	RJ 04 JUN 04

CHECK 04 JUN 04
CHECK AK
CHECK 24 JAN '74
CHECK LSD
CHECK 74
DRAWN DJW 14 JAN 74
FORMTEK

Downloaded from Elcodis.com electronic components distributor