Downloaded from Elcodis.com electronic components distributor

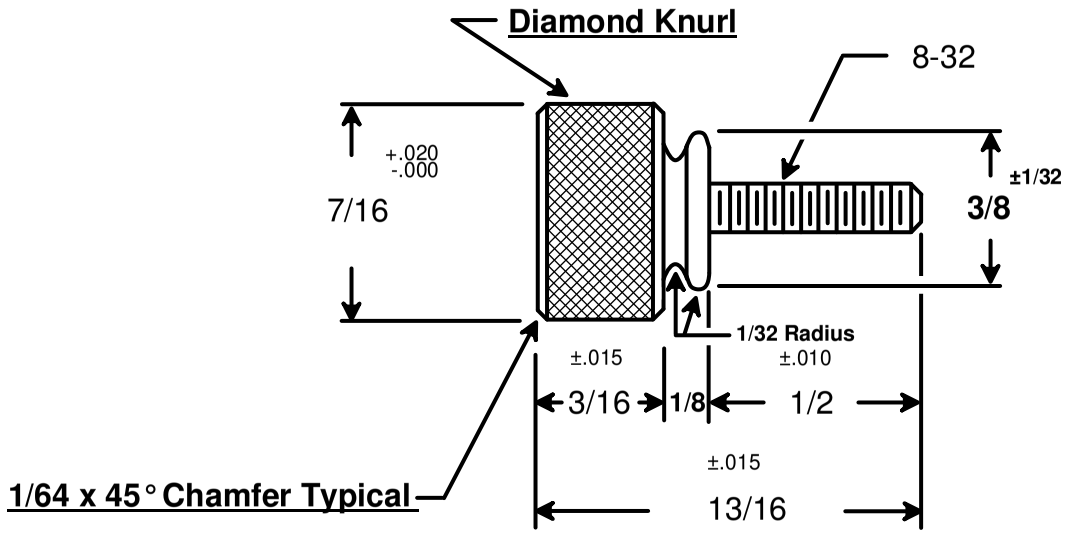

RoHS COMPLIANT

DRAWING NOT TO SCALE

DRAWN BY : GARY HUPPRICH	DATE 09/24/09
CHECKED BY :	DATE
MATERIAL STAINLESS STEEL	
FINISH	

RAF ELECTRONIC HARDWARE
95 SILVERMINE RD. SEYMOUR, CT. 06483
TEL: { 203 } 888-2133
FAX: { 203 } 888-9860
WEB: http://www.rafhdwe.com
a Division of MW Industries, Inc.

TOLERANCES
{ EXCEPT AS NOTED }
FRACTION ±.005
DECIMAL ±.005

TITLE
WASHER FACE THUMB SCREW

PART NO.
7107-SS