Coin Cell Battery Holder

122-27324-GR

Date Last Revised: 02/01/08

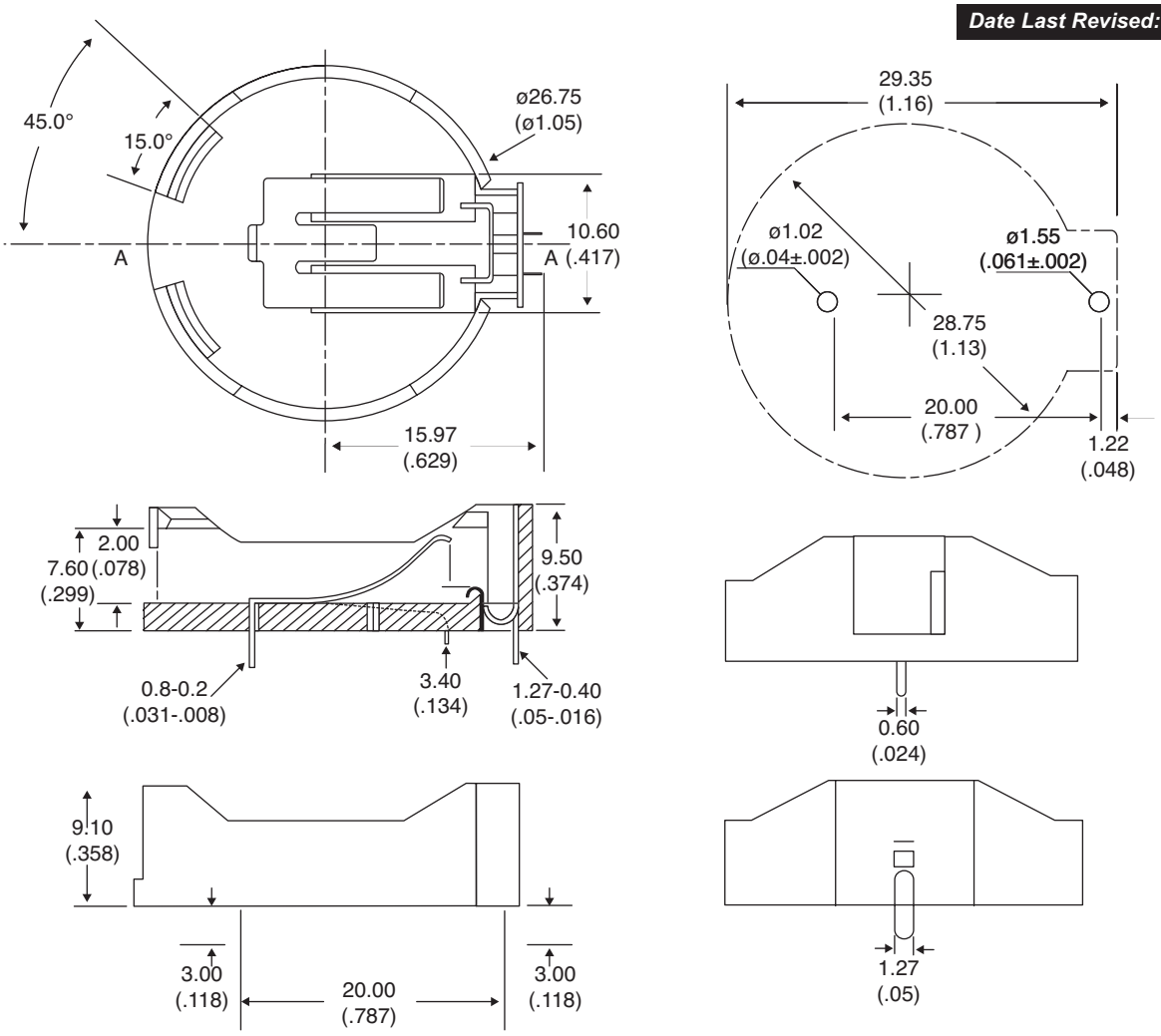

Dimensions: mm (in.)

ELECTRICAL SPECIFICATIONS	
Voltage:	250VAC
Contact Resistance:	20mΩ max
Insulator Riesistance:	100MΩ at DC 500V
Dielectric Strength:	AC1000V Per minute
Operation Temperature:	-40°C to -85°C

MATERIAL SPECIFICATIONS	
Insulator:	Glass Siled PBT UL94V-0
Contact:	Phosphor Bronze
Contact Finian:	Tin/Lead (80u°-200u°) over all
RoHS Compliant	

Available from Mouser Electronics
1-800-346-6873
www.mouser.com

EPD-200698

Specifications are subject to change without notice. No liability or warranty implied by this information. Environmental compliance based on producer documentation.

Downloaded from Elcodis.com electronic components distributor