REV.	DATE	ECR NO.	DESCRIPTION
NC	08/04/98	–	INITIAL RELEASE
A	03/27/05	100025	UPDATE DRAWING FORMAT

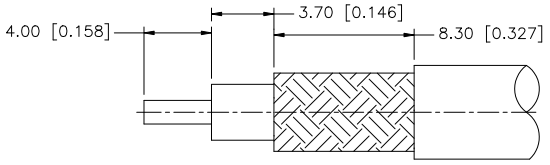

RECOMMENDED
CABLE STRIPPING DIM'S

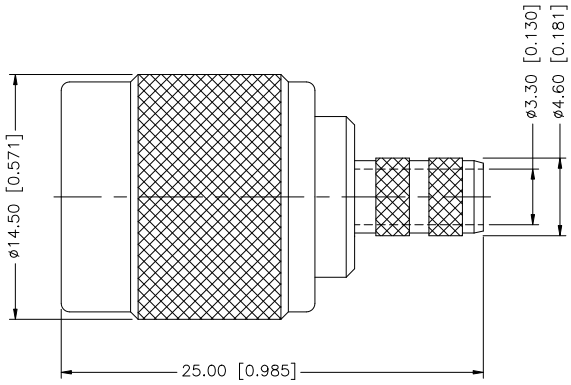

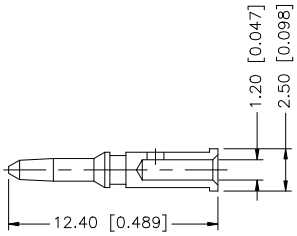

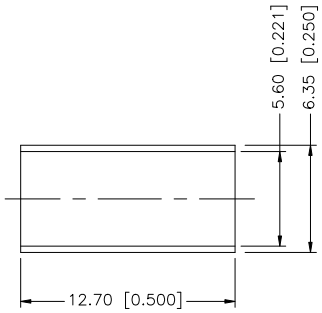

	DESCRIPTION	MATERIAL	FINISH	QTY
8				
7				
6				
5				
4	FERRULE	BRASS	NICKEL	1
3	CONTACT PIN	BRASS	GOLD	1
2	INSULATOR	PTFE	NATURAL	1
1	BODY	BRASS	NICKEL	1

UNLESS OTHERWISE SPECIFIED DIMENSIONS ARE IN MILLIMETERS. DIMENSIONS IN [ ] ARE IN INCHES AND FOR CUSTOMER REFERANCE ONLY.

UNLESS OTHERWISE SPECIFIED TOLERANCES FOR MILLIMETERS ARE:
0.5 – 8mm ± 0.20mm
8 – 30mm ± 0.40mm
30 – 120mm ± 0.50mm

UNLESS OTHERWISE SPECIFIED TOLERANCES FOR INCHES ARE:
.020 – .315 = ± 0.007"
.315 – 1.180 = ± 0.015"
1.180 – 4.724 = ± 0.020"

DO NOT SCALE DRAWING

APPROVALS		DATE
DRAWN	GRS	06/04/08
CHECKED		
ISSUED		
SHEET	1 OF 1	
CAD FILE	C:/122/122410.DWG	

Amphenol Connex

PART DESCRIPTION: TNC CRIMP PLUG – LMR 200

PART NO.: 122410

DWG. NO.: 122410.DWG | REV.: A | SIZE: A | SCALE: NA

Downloaded from Elcodis.com electronic components distributor