REV.	DATE	DESCRIPTION
NC	04/31/03	INITIAL RELEASE
A	10/27/05	MODIFY – INSULATOR NOW INTERNAL

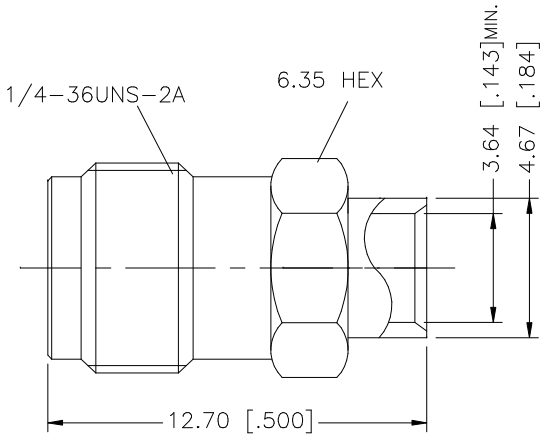

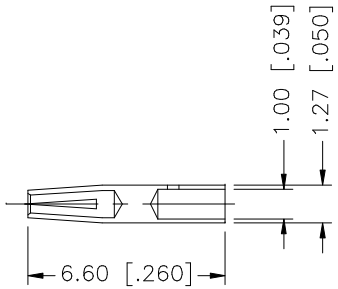

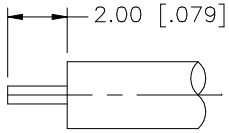

RECOMMENDED CABLE STRIPPING DIMS.

	DESCRIPTION	MATERIAL	FINISH	QTY
8				
7				
6				
5				
4				
3	CONTACT PIN	BER. COPPER	GOLD	1
2	INSULATOR	TEFLON	NATURAL	1
1	BODY	BRASS	GOLD	1

UNLESS OTHERWISE SPECIFIED DIMENSIONS ARE IN MILLIMETERS. DIMENSIONS IN [ ] ARE IN INCHES AND FOR CUSTOMER REFERANCE ONLY.

UNLESS OTHERWISE SPECIFIED TOLERANCES FOR MILLIMETERS ARE:
0.5 – 8mm ± 0.20mm
8 – 30mm ± 0.40mm
30 – 120mm ± 0.50mm

UNLESS OTHERWISE SPECIFIED TOLERANCES FOR INCHES ARE:
.020 – .315 = ± 0.007"
.315 – 1.180 = ± 0.015"
1.180 – 4.724 = ± 0.020"

DO NOT SCALE DRAWING

APPROVALS		DATE
DRAWN	G.R.S.	10/27/05
CHECKED		
ISSUED		
SHEET	1 OF 1	
CAD FILE	C:/132/132104.DWG	

Amphenol Connex

PART DESCRIPTION
SMA DIRECT SOLDER JACK
(FOR .141" SEMI–RIGID CABLE)

PART NO. 132104

DWG. NO.	REV.	SIZE	SCALE
132104.DWG	A	A	NA

Downloaded from Elcodis.com electronic components distributor