Rev	AWO #	Description	Date	Appr
-		RELEASED	6/16/05	

APPROVED: _____

DATE: _____ TITLE: _____

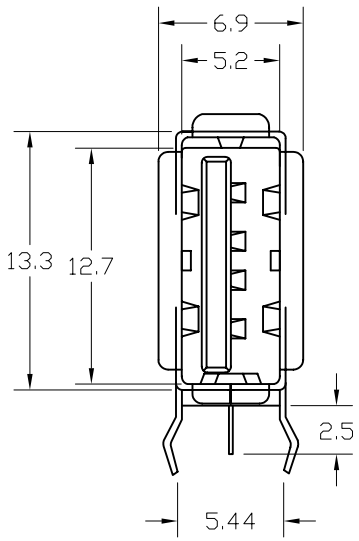

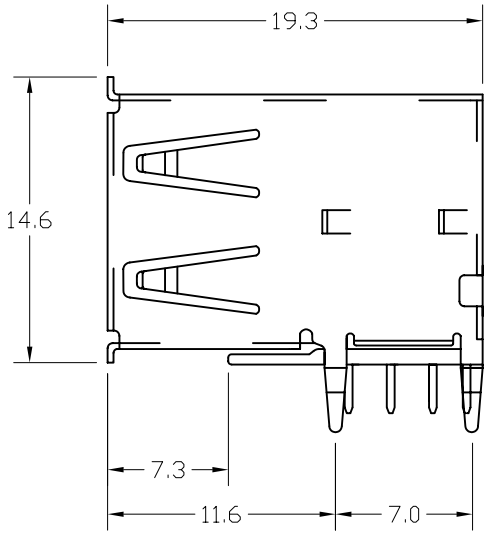

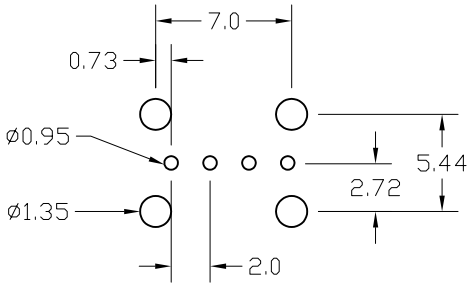

RECOMENDED
PCB LAYOUT

SPECIFICATIONS:
Material:
Insulator: PBT, glass reinforced, rated UL 94V–0
Insulator color: Black
Contacts: Phosphor Bronze
Shell: Brass, Tin plated over Copper underplate
Plating:
Gold flash over Nickel underplate on mating area, Tin over Copper underplate on solder tails
Electrical:
Operating voltage: 30V AC max
Current rating: 1 Amp max
Contact resistance: 30 mohms max
Insulation resistance: 100 Mohms min
Dielectric withstanding voltage: 250V AC Max.
Temperature Rating:
Operating temperature: –40°C to +85°C
Environmental:
Lead free, RoHS compliant
Recommended soldering temp: 230°C for 5 seconds

RoHS COMPLIANT

UNLESS OTHERWISE SPECIFIED
ALL DIMENSIONS ARE INCHES [MM]
TOLERANCES: EXCEPT AS NOTED

INCHES		HOLES	
.X	± .10	Ø.X	±.10
.XX	± .020	Ø.XX	±.015
.XXX	± .015	Ø.XXX	±.010

APPROVALS		DATE
DRAWN	SS	6/16/05
CHECKED		
APPROVED		

ADAM TECH
909 Rahway Avenue, Union, NJ 07083
Phone: 908-687-5000 Fax: 908-687-5710

TITLE: USB, TYPE A, RIGHT ANGLE UPRIGHT THRU-HOLE, GOLD FLASH

SIZE	PART NO.	REV.
X	USB-A-S-RU	-

REF: | SCALE: NTS | SHEET 1 OF 1

Downloaded from Elcodis.com electronic components distributor