Alle Rechte vorbehalten/ All rights reserved

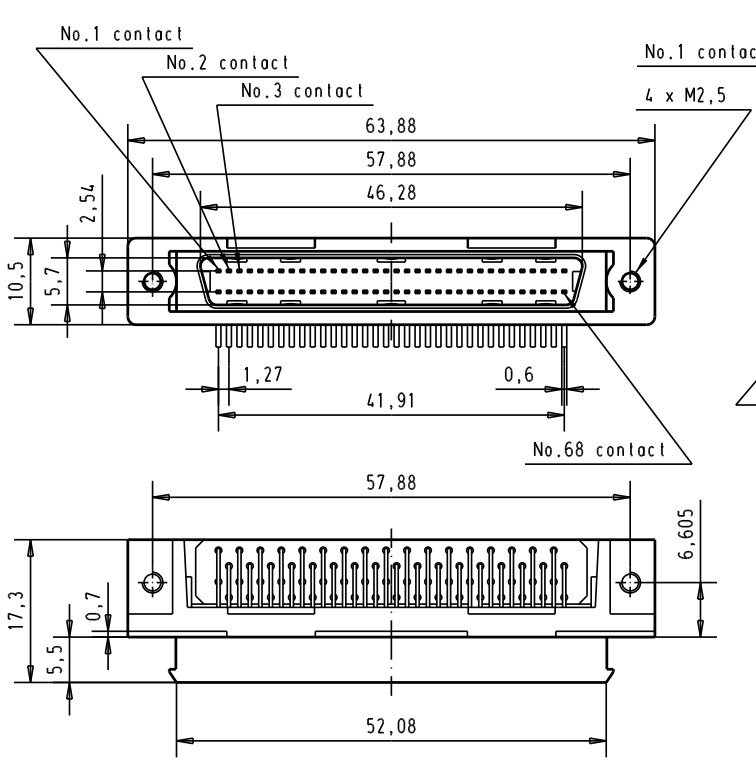

Printed board layout
Component side

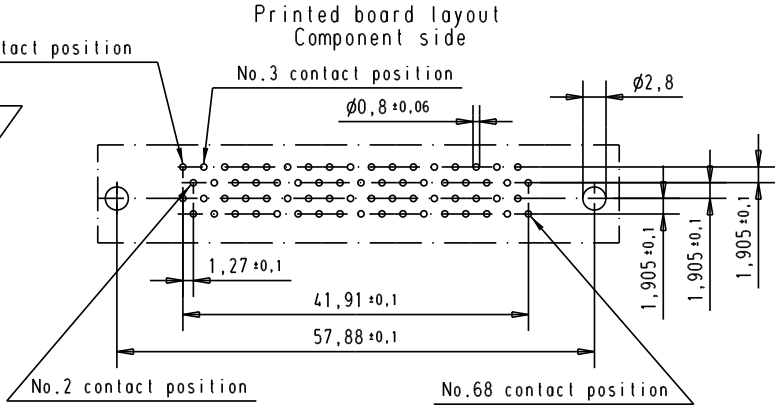

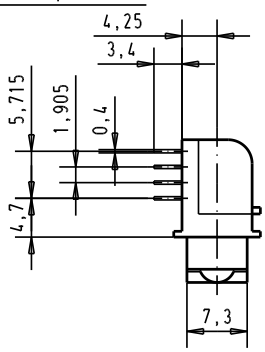

				Dat.	Name
			Detail.	04 FEB 00	JB
			Insp.		
33254	08-NOV-05	JB	Stand.		
27941	30-AUG-00	JB			
26572	04 FEB 00	JB			
Mod.	Dat.	Name			

All Dim. in mm
Orig. Size DIN A 4

har.mik® I/O pin/socket
68 poles male connector
with angled solder pins
and fixed latching

Maßstab/ *Scale* 1,5:1

HARTING EURL
F-95972 Paris

TB 60 01 068 5232

Sub.

Blatt/ *Page* 1/1

Downloaded from Elcodis.com electronic components distributor