# PC Mount DC Power Jacks

## 163-179PH-EX, 163-180PH-EX

KOBICONN

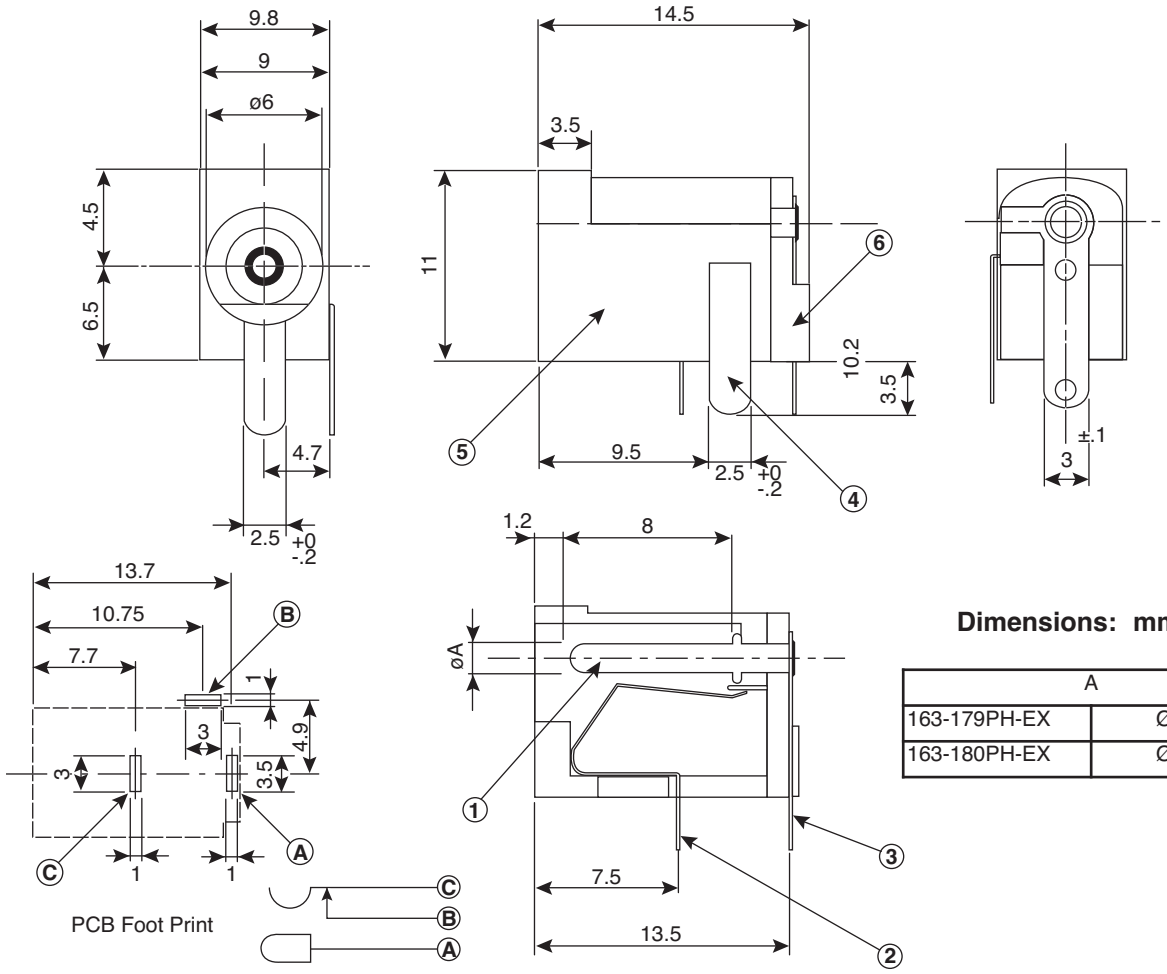


**Dimensions: mm(in)**

| A | |
|---|---|
| 163-179PH-EX | Ø1.95 |
| 163-180PH-EX | Ø2.35 |

## MATERIAL SPECIFICATIONS

| ITEM | Part Name | Material | QTY | Finish |
|---|---|---|---|---|
| 1 | Center Pin | Brass | 1 | Ni |
| 2 | Terminal (S) | FAB t=0.25 | 1 | Sn |
| 3 | Terminal (J) | Brass t=0.4 | 1 | Sn |
| 4 | Terminal (B) | Brass t=0.4 | 1 | Sn |
| 5 | Housing | PBT G15% | 1 | -------- |
| 6 | Insulator | PBT G15% | 1 | -------- |
| RoHS Compliant | | | | |

***Date Last Revised: 12/16/08***

***Available from Mouser Electronics***
***1-800-346-6873 / www.mouser.com***

KC-301287

Specifications are subject to change without notice. No liability or warranty implied by this information. Environmental compliance based on producer documentation.



Downloaded from Elcodis.com electronic components distributor