KYCON, Inc. 1810 Little Orchard Street, San Jose, CA 95125 (408)494-0330

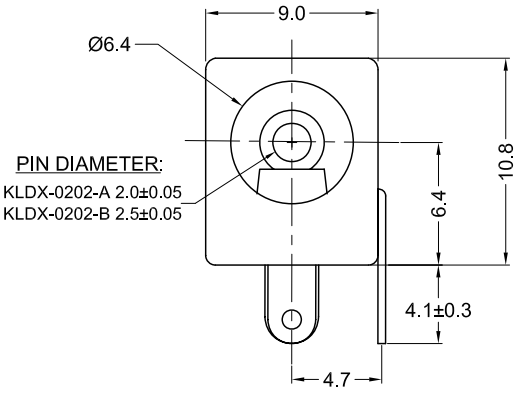

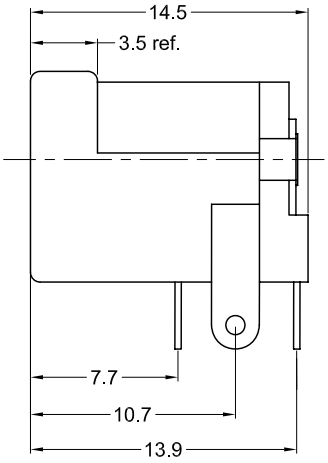

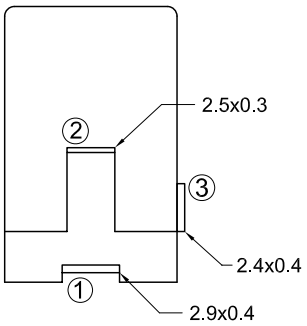

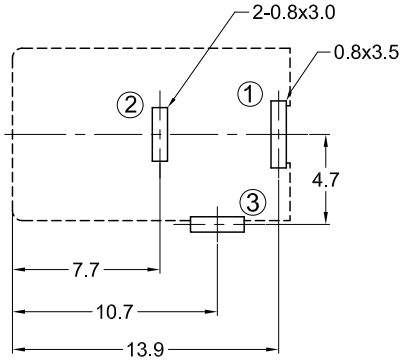

PCB Layout
(Top View)

Schematic

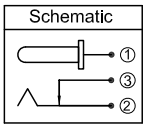

Material and Finish

Body: PBT Thermoplastic
UL94V-0, Color: Black

Center Pin: Copper Alloy, Nickel Plated

Contact #1: Brass, Matte Tin Plated

Contact #2: Phosphor Bronze, Matte Tin Plated

Contact #3: Brass, Matte Tin Plated

Electrical Characteristics

Contact Resistance
Before Test
Between Terminals: 30 milliohms Max.
Plug to Contacts: 50 milliohms Max.

After Test:
Between Terminals: 60 milliohms Max.
Plug to Contacts: 100 milliohms Max.

Rated Voltage: 24V DC

Rated Current: 3.5A

Insulation Resistance: 100 Megohms Min.
at 500V DC

Mechanical Characteristics

Durability Test: 5000 cycles

Insertion Force: 0.3kg-2.5kg

Extraction Force: 0.3kg-2.5kg

Operating Temp: -25°C to +85°C

Part Number	Center Post Diameter
KLDX-0202-A	Ø2.0±0.05
KLDX-0202-B	Ø2.5±0.05

RoHS COMPLIANT
EU Directive 2002/95/EC

C US
LR78160

Tolerances
X.X ± 0.3
X.XX ± 0.15
Unless Stated Otherwise

REV.	DATE	DESCRIPTION	REV. BY	CHK. BY
C1	11/13/06	ECO# 06-058	H. MA	C.Furumasu
C2	01/15/07	ECO# 07-002	R. Aguirre	H. MA
C3	05/22/07	ECO# 07-016	A. Frederick	H. MA
C4	07/24/09	ECO# 09-059	S. Vien	H. MA
D1	9/8/09	Change to matte tin plating	H. MA	N/A
D2	04/05/11	ECO #11-024	S. Vien	H. MA

DRAWN BY	DATE
H. MA	5/31/05
	UNITS
	mm

KLDX-0202-X

Thru-hole DC power jack

for 2.0 and 2.5 mm plugs, RoHS Compliant

KYCON

Downloaded from Elcodis.com electronic components distributor