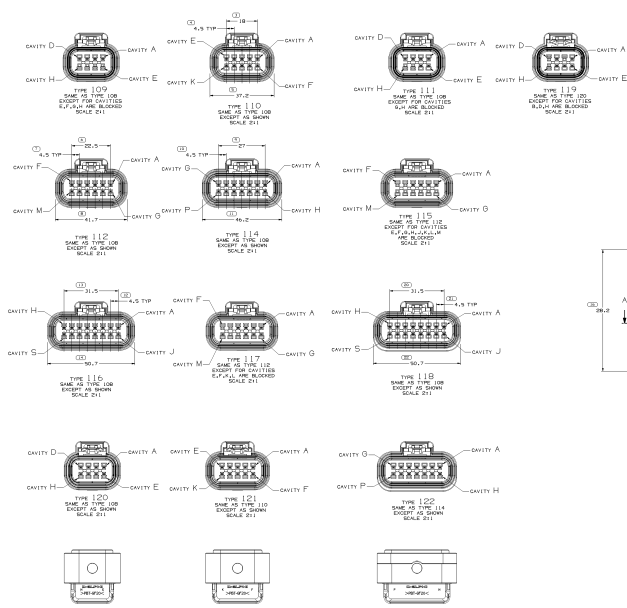

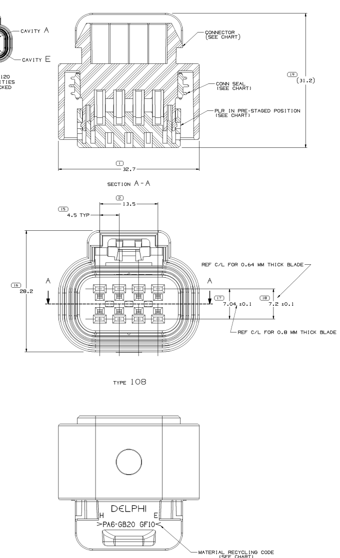

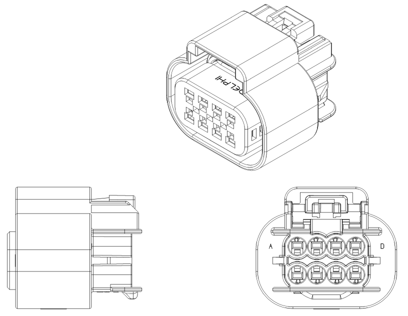

SYMBOL DEFINITION			MISSING SYMBOLS
A DIMENSION WITHOUT AN INSPECTION REPORT SYMBOL ( ) DOES NOT REQUIRE INSPECTION. IT MAY BE CONTROLLED ON THE INDIVIDUAL COMPONENT DRAWING.	TOTAL NO OF INSPECTIONS REQUIRED	22	NO MISSING SYMBOL NUMBER
	LAST NO. USED	22	

DATE	STG	REV	N/P	CHG	ZONE	REVISION HISTORY	AUTH	DR	APVD 1	APVD 2
12MR02	R	04	-	-		CLEARED REVISION COLUMN ALL PARTS - REDRAWN TO NEW FORMAT & ADDED TPA COLUMN	222112	LMB	LMB	CD
28JN02	R	05	-	-		UPDATED PDM ATTRIBUTES	227240	HAM	HAM	CD
30AP03	-	06	-	-	-	15465944 THRU 15465947 - RELEASED	239314	JS	JS	CD
02OC03	R	07	-	-		15479300 - RELEASED	246054	EES	EES	MJC
03OC03	R	08	-	-		ALL PARTS EXCEPT 15479300 - UPDATED WITH CURRENT CONNECTOR REVISIONS	246605	EES	EES	MJC
02NO03	R	09	-	-		ALL PARTS - REVISED NOTE #2	248208	MAC	MAC	MC
12JA04	R	10	-	-		15479300 - 15358785 TPA WAS 15458785; ALL PARTS - ADDED 15317832 CPA	250447	TLD	TLD	MJC
10AU04	R	11	-	-		15465947, 15465945 - OBSOLETE	257407	ADK	ADK	MC
07SE04	R	12	-	-		15465945 - REINSTATED	258738	EES	EES	MC
28JN05	R	13	-	-		13530777 - RELEASED	269487	AKJ	AKJ	RWR
06SE05	R	14	-	-		13530777 - UPDATED PDM ATTRIBUTES	271983	JBD	AUG	RWR
11NO05	R	15	-	-		13548638 - RELEASED	274593	JTV	AUG	JGS
08DE05	R	16	-	-		ALL PARTS - ADDED CAVITY PLUG NOTE; 13548638 - UPDATED WITH CURRENT CONNECTOR REVISIONS; RELEASED 13545280, 13545282, AND 13544615	273937	MM	MM	LN
19MY06	R	17	-	-		13530777 - UPDATED PDM ATTRIBUTES	280784	JBD	AUG	EJH
20JL06	R	18	-	-		13548638 - REVISED CALLOUT	282885	JTZ	FKV	JGS
04AP07	R	19	-	-		15326863, 15326856, 15326849, 15326842 & 15326835 - UPDATED PDM ATTRIBUTES	401054	GLG	JVM	PYP
29MY07	R	20	-	-		ALL PARTS - ADDED COLUMNS (CONNECTOR COLOR & REPLACED BY); 15326835, 15326842, 15326849 & 15326863 - RESTRICTED	401553	ECB	AUG	PYP

NOTES

1. UNLESS OTHERWISE SPECIFIED AND/OR INDICATED:

   DIMENSIONS ARE TO FACE OF VIEW SHOWN AND AUTOMATICALLY ROUNDED BY COMPUTER FOR INSPECTION (SEE MATH MODEL FOR PRECISE DIMENSIONS). FOR ALL OTHER DIMENSIONS NOT SHOWN BUT REQUIRED FOR TOOL BUILD, SEE MATH MODEL FOR PRECISE TOOL PATH DATA.

2. THIS PART ACCEPTS THE FOLLOWING COMPONENTS OR EQUIVALENT:
   TERMINAL 12191818
   CPA 15317832
   CABLE SEAL 15366021
   CAVITY PLUG 15305171
   TPA-SEE CHART

   THIS CONNECTION MEETS OR EXCEEDS SAE/ USCAR-2 AUGUST 1997, SECTION 5.3.1.2, TERMINAL DISENGAGE CRITERIA WITH THE APPLICATION OF A TERMINAL POSITION ASSURANCE (TPA) SECONDARY LOCK. (SEE CHART BELOW FOR APPROPRIATE TPA).

3. PLASTIC MATING ASSEMBLIES:

   SEE CHART

PART NO	REV	N/P	STATUS	TYPE	CONNECTOR	MATERIAL RECYCLING CODE	CONNECTOR COLOR	CONNECTOR SEAL	PLR	MATING CONNECTOR ASSEMBLY	MATING TPA	CONFIG REQ INFORMATION	REPLACED BY
13544615	01	AA	-	122	13544614	PBT GF20	BLK	15326859	15326858	15326861	15430904	15336048	-
13545282	01	AA	-	121	13545281	PBT GF20	BLK	15326845	15326844	15326847	15418288	15336045	-
13545280	01	AA	-	120	13545279	PBT GF20	BLK	15326838	15326837	15326840	15418415	15336044	-
13548638	02	AB	-	119	13548635	PBT GF20	BLK	15326838 / ID406216	15326837 / ID406217	15326840 / ID406221	15418415	15336044	-
13530777	01	AC	-	112	13530636	PBT GF20	BLK	15326852	15326851	15326854	15430903	15336047	-
15479300	01	AD	-	118	15479299	PBT GF20	BLK	15326866 / ID406241	15326865 / ID406242	15326868 / ID406247	15358785	15446049	-
15465947	02	AC	OBSOLETE	117	15465025	PA6-GB20 GF10	BLK	15326852 / ID406228	15326851 / ID406229	15326854 / ID406233	15430903	15336047	-
15465946	02	AD	-	115	15465024	PA6-GB20 GF10	BLK	15326852 / ID406228	15326851 / ID406229	15326854 / ID406233	15430903	15336047	-
15465945	02	AF	-	111	15465021	PA6-GB20 GF10	BLK	15326838 / ID406216	15326837 / ID406217	15326840 / ID406221	15418415	15336044	-
15465944	02	AD	-	109	15465020	PA6-GB20 GF10	BLK	15326838 / ID406216	15326837 / ID406217	15326840 / ID406221	15418415	15336044	-
15326863 / ID406245	03	AE	RESTRICTED	116	15326862 / ID406244	PA6-GB20 GF10	BLK	15326866 / ID406241	15326865 / ID406242	15326868 / ID406247	15358785	15336049	15479300
15326856 / ID406238	03	AE	-	114	15326855 / ID406237	PA6-GB20 GF10	BLK	15326859 / ID406234	15326858 / ID406235	15326861 / ID406240	15430904	15336048	-
15326849 / ID406231	02	AE	RESTRICTED	112	15326848 / ID406230	PA6-GB20 GF10	BLK	15326852 / ID406228	15326851 / ID406229	15326854 / ID406233	15430903	15336047	13530777
15326842 / ID406225	02	AE	RESTRICTED	110	15326841 / ID406224	PA6-GB20 GF10	BLK	15326845 / ID406222	15326844 / ID406223	15326847 / ID406227	15418288	15336045	13545282
15326835 / ID406219	02	AE	RESTRICTED	108	15326834 / ID406218	PA6-GB20 GF10	BLK	15326838 / ID406216	15326837 / ID406217	15326840 / ID406221	15418415	15336044	13545280

DELPHI

DELPHI PACKARD ELECTRICAL/ELECTRONIC ARCHITECTURE
WARREN, OH

		DATE
DR	B. NAGY	23JN97
APVD1	M. MCCALL	17JL97
APVD2	M. MCCALL	17JL97
APVD3	M. CHUPAK	25JL97
APVD4		
APVD5		

SUBSTANCES OF CONCERN AND RECYCLED CONTENT PER DELPHI 10949001

DWG TYPE: PART DRAWING
STYLE:
VOLUME (CM³):
DISTR CODE: D

UNLESS OTHERWISE SPECIFIED
THIS DOCUMENT IS IN ACCORDANCE WITH ASME Y14.5M-1994 AS AMENDED BY THE GM GLOBAL DIMENSIONING AND TOLERANCING ADDENDUM - 1997. ALL GEOMETRIC TOLERANCES AND RELATED DATUMS APPLY RFS. RULE #1(PERFECT FORM AT MMC) DOES NOT APPLY WHEN RELATIONSHIP BETWEEN FEATURES IS ESTABLISHED BY ORIENTATION OR LOCATION TOLERANCES. SEPARATE POSITION CALLOUTS MAY BE GAGED SEPARATELY, REGARDLESS OF DATUM REFERENCE.
ALL DIMENSIONS ARE IN MILLIMETERS

REFERENCE:

THIRD ANGLE PROJECTION
DO NOT SCALE
USE MATH DATA

MATERIAL: SEE DRAWING

DRAWING NAME: TAXI ASM CONN F GT 150 SLD

DRAWING NUMBER: 15326973

SIZE	SCALE	FRAME NO	SHEET NO	STG	REV	N/P
A1x3	5:1	1 OF 2	1 OF 1	R	20	-

DRAWING NUMBER: 15326973

SIZE	SCALE	FRAME NO	SHEET NO	STG	REV	N/P
A1x3	5:1	2 OF 2	1 OF 1	R	20	-

Downloaded from Elcodis.com electronic components distributor