DO NOT SCALE

PART NO 1216 0480

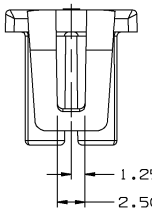

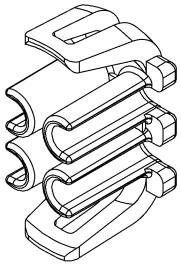

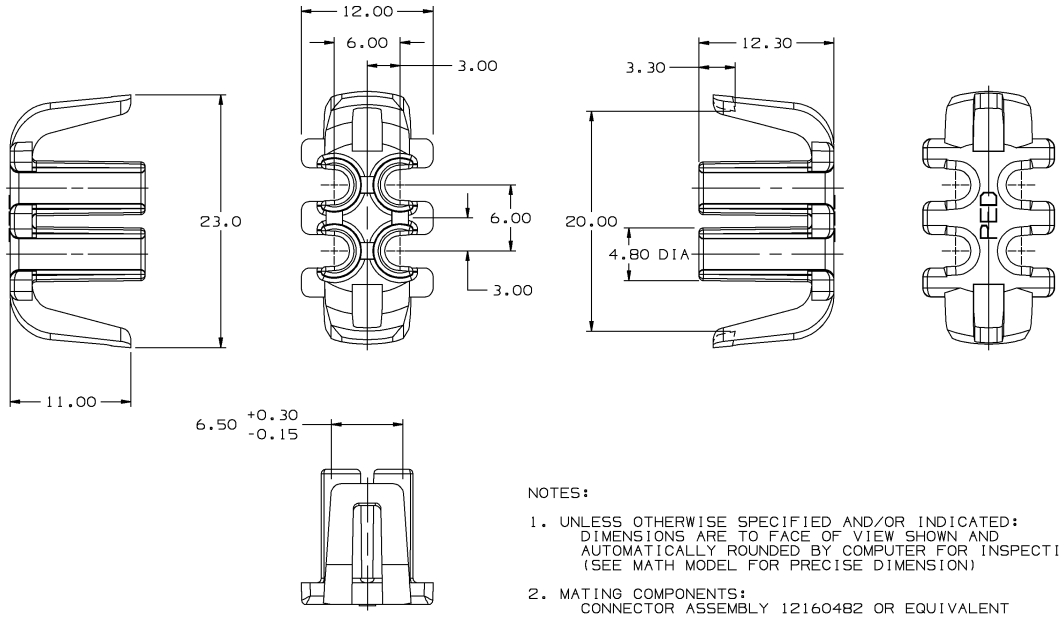

NOTES:

1. UNLESS OTHERWISE SPECIFIED AND/OR INDICATED:
   DIMENSIONS ARE TO FACE OF VIEW SHOWN AND
   AUTOMATICALLY ROUNDED BY COMPUTER FOR INSPECTION.
   (SEE MATH MODEL FOR PRECISE DIMENSION)

2. MATING COMPONENTS:
   CONNECTOR ASSEMBLY 12160482 OR EQUIVALENT

DATE	SYM	REVISION RECORD	AUTH	DR	CK
18AP94	A	WAS PE041373 & RELEASED	940005	KLJ	DLB
18JL94	B	REVISED GRAPHICS	161374	AUG	DLB
23NO94	B1	REVISED	164472	JGS	BAS
10AP97	B2	UPDATED AND REVISED			
		GRAPHICS	177578	HH	JIB
21OC98	B3	UPDATED AND REVISED			
		GRAPHICS	190269	JIB	JIB

PART NO 1216 0480

DRAWING TYPE PID

OTHER DRAWINGS AVAILABLE

UGraphics II

METRIC
DIMENSIONS ARE IN MILLIMETERS UNLESS OTHERWISE SPECIFIED

THIRD ANGLE PROJECTION

TOLERANCE UNLESS OTHERWISE SPECIFIED
DECIMAL: ANGULAR ±2°
ONE PLACE ±0.3
TWO PLACE ±0.15

CODE NO 6900 | QC

DES DAN HUFF 14OC93

DWG DATE 18AP94

DR K.L. JONES 18AP94

SCALE 4:1

CK D BRANTINGHAM 19AP94

REFERENCE NO 12160480 "A1" SIZE

APPR PAUL OLBRYCH 25AP94

VOL CM³ 0.759

MATERIAL SPEC R0071784
NYLON 66 HS IM MEDIUM GRAY

NAME
TPA M/P 150

PART NUMBER 1216 0480

SIZE A2

DELPHI PACKARD ELECTRIC SYSTEMS
WARREN, OHIO 44486

Downloaded from Elcodis.com electronic components distributor