3.5 Mono Custom Molding Plug

171-P3154-L-E

KOBICONN

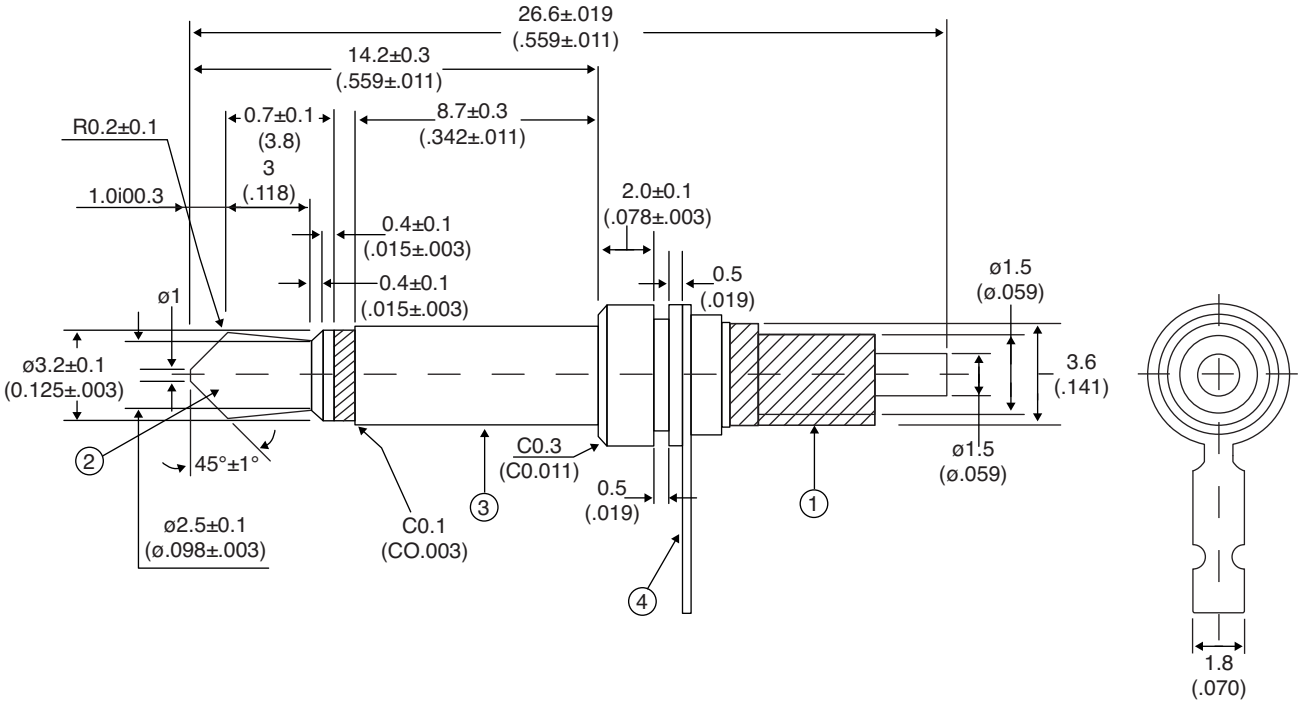

Dimensions: mm (in.)

ELECTRICAL SPECIFICATIONS	
Dielectric Strenght:	AC 500V@1min.
Insulation Resistance:	DC 500V/100MΩ 1min.

MATERIALS SPECIFICATIONS

No.	Material	Plating	Thickness
1	POM	Black	2um min
2	Brass	Nickel	2um min
3	Brass	Nickel	2um min
4	P-Bronze	Nickel	2um min
RoHS Compliant			

Date Last Revised: 09/21/10

3.5 Mono Custom Molding Plug
171-P3154-L-E

Available from Mouser Electronics
1-800-346-6873 / www.mouser.com

KC-301208

Specifications are subject to change without notice. No liability or warranty implied by this information. Environmental compliance based on producer documentation.

Downloaded from Elcodis.com electronic components distributor