Instrument Control Knobs

450-ME51, 450-ME52, 450-ME71

Date Last Revised: 6/30/05

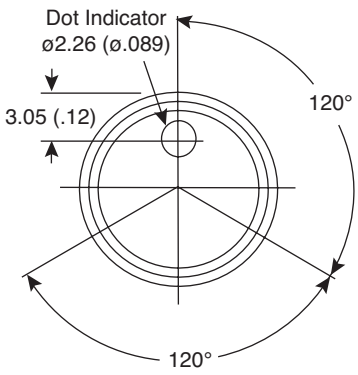

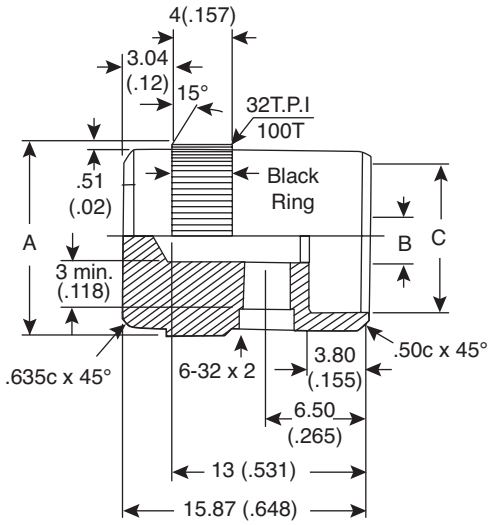

Dimensions: mm (In.)

SPECIFICATIONS	
Material:	Aluminum and ABS
Finish:	Spin
Tolerance:	ø0-4 ± .10mm; ø4.1-16 ± .25mm; ø16-64 ± .30mm
Body:	Natural with black ring

DIMENSIONS MM (IN.)			
Mouser Stock No.	A	B	C
450-ME51	12.70 (.50)	3.20 (.13)	9.50 (.37)
450-ME52	12.70 (.50)	6.40 (.25)	9.50 (.37)
450-ME71	18.80 (.74)	6.40 (.25)	16 (.63)

Available from Mouser Electronics
1-800-346-6873
www.mouser.com

EPD-200218

Specifications are subject to change without notice. No liability or warranty implied by this information. Environmental compliance based on producer documentation.

Downloaded from Elcodis.com electronic components distributor