ELECTRONICS, INC.
44 FARRAND STREET
BLOOMFIELD, NJ 07003
(973) 748–5089
http://www.nteinc.com

NTE2970
MOSFET
N–Channel, Enhancement Mode
High Speed Switch

Features:
- Avalanche Rugged Technology
- Rugged Gate Oxide Technology
- Lower Input Capacitance
- Improved Gate Charge
- Extended Safe Operating Area
- Lower Leakage Current
- Lower $R_{DS(ON)}$

Applications:
- SMPS
- DC–DC Converter
- Battery Charger
- Power Supply of Printer
- Copier
- HDD, FDD, TV, VCR
- Personal Computer

Absolute Maximum Ratings:

Drain–Source Voltage, V_{DSS} 500V
Drain Current, Continuous, I_D
  T_C = +25°C 22A
  T_C = +100°C 13.4A
Drain Current, Pulsed (Note 1), I_{DM} 88A
Gate–Source Voltage, V_{GS} . . . . . ±30V
Single Pulsed Avalanche Energy (Note 2), E_{AS} 2151mJ
Avalanche Current (Note 1), I_{AR} 22A
Repetitive Avalanche Energy (Note 1), E_{AR} 27.8mJ
Peak Diode Recovery dv/dt (Note 3), dv/dt 3.5V/ns
Total Power Dissipation (T_C = +25°C), P_D 278W
  Linear Derating Factor . . . . . 2.22W/°C
Operating Junction Temperature Range, T_J . . . . . –55° to +150°C
Storage Temperature Range, T_{stg} . . . . . –55° to +150°C
Lead Temperature (During Soldering, 1/8" from case, 5 sec.), T_L . . . . . +300°C
Maximum Thermal Resistance, Junction–to–Case, R_{thJC} . . . . . 0.45°C/W
Typical Thermal Resistance, Case–to–Sink, R_{thCS} . . . . . 0.24°C/W
Maximum Thermal Resistance, Junction–to–Ambient, R_{thJA} . . . . . 40°C/W

Note 1. Repetitive Rating: Pulse Width limited by Maximum Junction Temperature.
Note 2. L = 8mH, I_{AS} = 22A, V_{DD} = 50V, R_G = 27Ω, Starting T_J = +25°C.
Note 3. $I_{SD} \leq$ 22A, di/dt ≤ 300A/μs, $V_{DD} \leq V_{(BR)DSS}$, Starting T_J = +25°C.

Downloaded from Elcodis.com electronic components distributor

Electrical Characteristics: (T_C = +25°C unless otherwise specified)

Parameter	Symbol	Test Conditions	Min	Typ	Max	Unit
Drain–Source Breakdown Voltage	$V_{(BR)DSS}$	V_{GS} = 0V, I_D = 250μA	500	–	–	V
Breakdown Voltage Temperature Coefficient	$\Delta BV/\Delta T_J$	I_D = 250μA	–	0.69	–	V/°C
Gate Threshold Voltage	$V_{GS(th)}$	V_{DS} = 5V, I_D = 250μA	2.0	–	4.0	V
Gate–Source Leakage	I_{GSS}	V_{GS} = ±30V	–	–	±100	nA
Zero Gate Voltage Drain Current	I_{DSS}	V_{DS} = 500V	–	–	10	μA
		V_{DS} = 400V, T_C = +125°C	–	–	100	μA
Static Drain–Source ON Resistance	$R_{DS(on)}$	V_{GS} = 10V, I_D = 11A, Note 4	–	–	0.25	Ω
Forward Transconductance	g_{fs}	V_{DS} = 50V, I_D = 11A, Note 4	–	17.31	–	mhos
Input Capacitance	C_{iss}	V_{GS} = 0V, V_{DS} = 25V, f = 1MHz	–	3940	5120	pF
Output Capacitance	C_{oss}		–	465	535	pF
Reverse Transfer Capacitance	C_{rss}		–	215	250	pF
Turn–On Delay Time	$t_{d(on)}$	V_{DD} = 200V, I_D = 22A, V_{GS} = 10V, R_G = 5.3Ω, Note 4, Note 5	–	27	65	ns
Rise Time	t_r		–	30	70	ns
Turn–Off Delay Time	$t_{d(off)}$		–	150	310	ns
Fall Time	t_f		–	43	95	ns
Total Gate Charge	Q_g	V_{DS} = 400V, V_{GS} = 10V, I_D = 22A, Note 4, Note 5	–	182	236	nC
Gate–Source Charge	Q_{gs}		–	26	–	nC
Gate–Drain (Miller) Charge	Q_{gd}		–	79.6	–	nC
Source–Drain Diode Ratings and Characteristics						
Continuous Source Current	I_S	Integral Reverse PN–Diode in the MOSFET	–	–	22	A
Pulsed Source Current (Note 1)	I_{SM}		–	–	88	A
Diode Forward Voltage	V_{SD}	T_J = +25°C, I_S = 22A, V_{GS} = 0V	–	–	1.4	V
Reverse Recovery Time	t_{rr}	T_J = +25°C, I_F = 22A, di_F/dt = 100A/μs, Note 4	–	528	–	ns
Reverse Recovery Charge	Q_{rr}		–	8.35	–	μC

Note 1. Repetitive Rating: Pulse Width limited by Maximum Junction Temperature.
Note 4. Pulse Test: Pulse Width = 250μs, Duty Cycle ≤ 2%.
Note 5. Essentially Independent of Operating Temperature.

Downloaded from Elcodis.com electronic components distributor

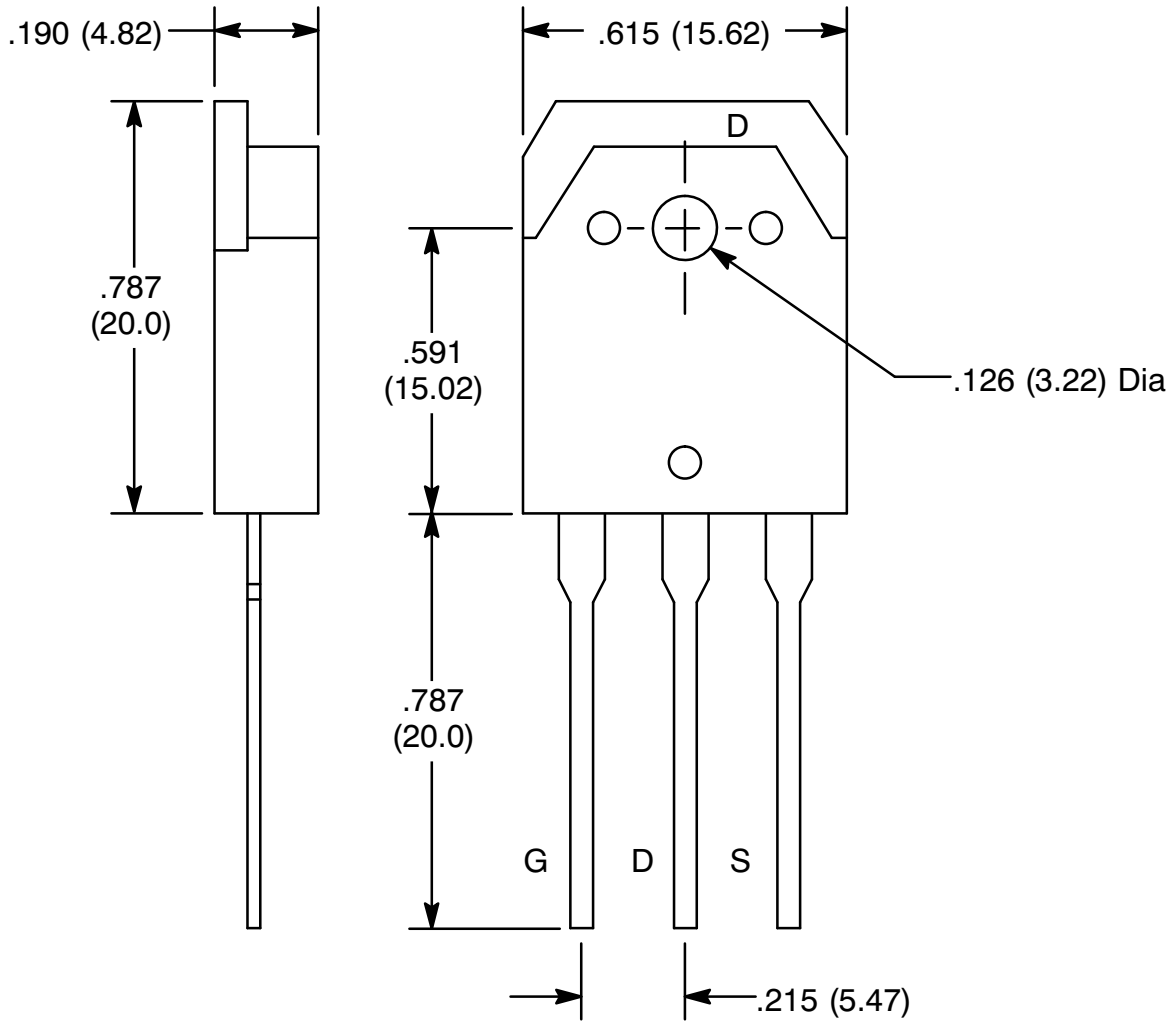

Downloaded from Elcodis.com electronic components distributor