CMOS Analog Switches

DESCRIPTION

The DG300B, DG303B family of monolithic CMOS switches feature three switch configuration options (SPST, SPDT, and DPST) for precision applications in communications, instrumentation and process control, where low leakage switching combined with low power consumption are required.

Designed on the Vishay Siliconix PLUS-40 CMOS process, these switches are latch-up proof, and are designed to block up to 30 V peak-to-peak when off. An epitaxial layer prevents latchup.

In the on condition the switches conduct equally well in both directions (with no offset voltage) and minimize error conditions with their low on-resistance.

Featuring low power consumption (3.5 mW typ.) these switches are ideal for battery powered applications, without sacrificing switching speed. Designed for break-before-make switching action, these devices are CMOS and quasi TTL compatible. Single supply operation is allowed by connecting the V- rail to 0 V.

FEATURES

- Analog signal range: ± 15 V
- Fast switching - t_{ON}: 150 ns
- Low on-resistance - $R_{DS(on)}$: 30 Ω
- Single supply operation
- Latch-up proof
- CMOS compatible

Pb-free Available

RoHS* COMPLIANT

BENEFITS

- Full rail-to-rail analog signal range
- Low signal error
- Low power dissipation

APPLICATIONS

- Low level switching circuits
- Programmable gain amplifiers
- Portable and battery powered systems

FUNCTIONAL BLOCK DIAGRAM AND PIN CONFIGURATION

DG300B
Plastic DIP

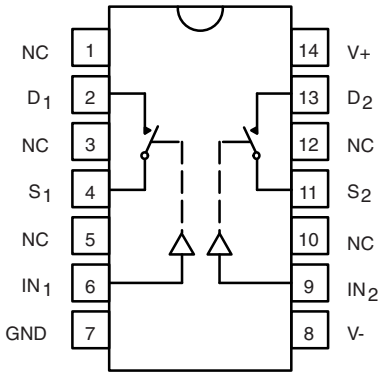

Top View

DG301B
Plastic DIP

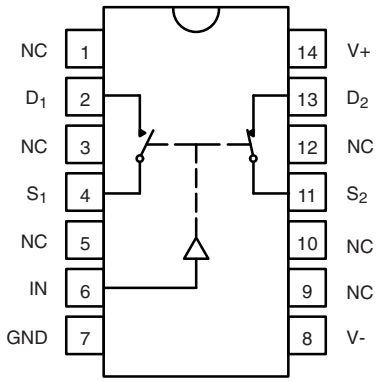

Top View

TRUTH TABLE	
Logic	**Switch**
0	OFF
1	ON

Logic "0" ≤ 0.8 V
Logic "1" ≥ 4 V

TRUTH TABLE		
Logic	**SW_1**	**SW_2**
0	OFF	ON
1	ON	OFF

Logic "0" ≤ 0.8 V
Logic "1" ≥ 4 V

* Pb containing terminations are not RoHS compliant, exemptions may apply.

FUNCTIONAL BLOCK DIAGRAM AND PIN CONFIGURATION

DG302B

Plastic DIP

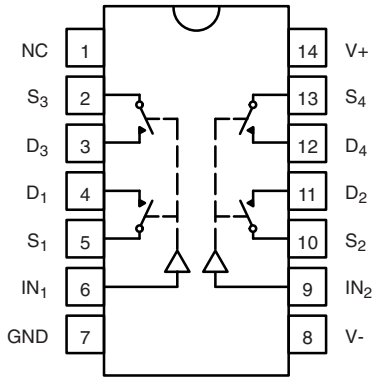

Top View

DG303B

Plastic DIP and SOIC

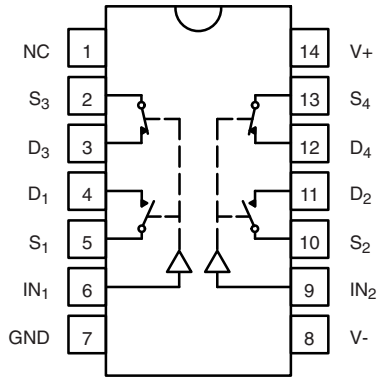

Top View

TRUTH TABLE	
Logic	**Switch**
0	OFF
1	ON

Logic "0" ≤ 0.8 V
Logic "1" ≥ 4 V

TRUTH TABLE		
Logic	**SW_1, SW_2**	**SW_3, SW_4**
0	OFF	ON
1	ON	OFF

Logic "0" ≤ 0.8 V
Logic "1" ≥ 4 V

ORDERING INFORMATION			
Temp. Range	**Standard Package**	**Standard Part Number**	**Lead (Pb)-free Part Number**
- 40 °C to 85 °C	14-Pin Plastic DIP	DG300BDJ	DG300BDJ-E3
		DG301BDJ	DG301BDJ-E3
		DG302BDJ	DG302BDJ-E3
		DG303BDJ	DG303BDJ-E3
	14-SOIC	DG303BDY	DG303BDY-T1 DG303BDY-E3 DG303BDY-T1-E3

ABSOLUTE MAXIMUM RATINGS (T_A = 25 °C, unless otherwise noted)			
Parameter		**Limit**	**Unit**
Voltages Referenced V+ to V-		44	V
GND		25	
Digital Inputs[a], V_S, V_D		(V-) - 2 to (V+) + 2 or 30 mA, whichever occurs first	
Current (Any Terminal)		30	mA
Continuous Current, S or D (Pulsed at 1 ms, 10 % duty cycle max.)		100	
Storage Temperature		- 65 to 150	°C
Power Dissipation (Package)[b]	14-Pin PlasticDIP[c]	470	mW
	SOIC-14[d]	600	

Notes:
a. Signals on S_X, D_X, or IN_X exceeding V+ or V- will be clamped by internal diodes. Limit forward diode current to maximum current ratings.
b. All leads welded or soldered to PC board.
c. Derate 6.5 mW/°C above 25 °C
d. Derate 7.6 mW/°C above 75 °C.

SCHEMATIC DIAGRAM (Typical Channel)

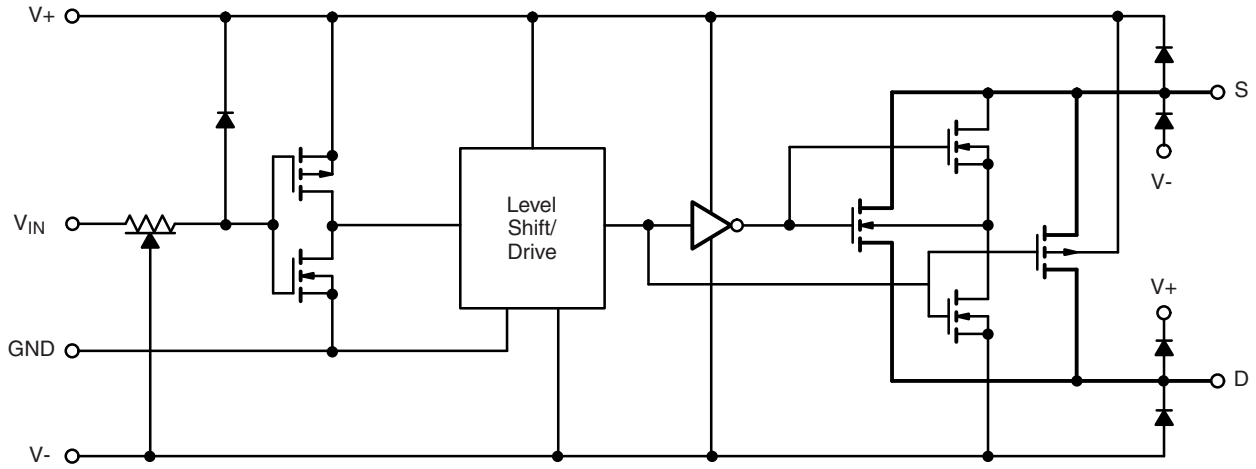

Figure 1.

SPECIFICATIONS[a]							
Parameter	Symbol	Test Conditions Unless Otherwise Specified V+ = 15 V, V- = - 15 V V_{IN} = 0.8 V or V_{IN} = 4 V[f]	Temp.[b]	Limits - 40 °C to 85 °C Min.[d]	Typ.[c]	Max.[d]	Unit
Analog Switch							
Analog Signal Range[e]	V_{ANALOG}		Full	- 15		15	V
Drain-Source On-Resistance	$R_{DS(on)}$	V_D = ± 10 V, I_S = - 10 mA	Room Full		30	50 75	Ω
Source Off Leakage Current	$I_{S(off)}$	V_S = ± 14 V, V_D = ± 14 V	Room Hot	- 5 - 100	± 0.1	5 100	nA
Drain Off Leakage Current	$I_{D(off)}$	V_S = ± 14 V, V_D = ± 14 V	Room Hot	- 5 - 100	± 0.1	5 100	nA
Drain On Leakage Current	$I_{D(on)}$	V_S = V_D = ± 14 V	Room Hot	- 5 - 100	± 0.1	5 100	nA
Digital Control							
Input Current with Input Voltage High	I_{INH}	V_{IN} = 5 V	Room Full	- 1	- 0.001		µA
		V_{IN} = 15 V	Room Full		0.001	1	µA
Input Current with Input Voltage Low	I_{INL}	V_{IN} = 0 V	Room Full	- 1	- 0.001		µA
Dynamic Characteristics							
Turn-On Time	t_{ON}	see figure 2	Room		150		ns
Turn-Off Time	t_{OFF}	see figure 2	Room		130		ns
Break-Before-Make Time	t_{OPEN}	DG301B, DG303B Only figure 3	Room		50		ns
Charge Injection	Q	C_L = 1 nF, R_{gen} = 0 Ω, V_{gen} = 0 V figure 4	Room		8		pC
Source Off Capacitance	$C_{S(off)}$	V_S, V_D = 0 V, f = 1 MHz	Room		14		pF
Drain Off Capacitance	$C_{D(off)}$	V_S, V_D = 0 V, f = 1 MHz	Room		14		pF
Channel-On Capacitance	$C_{D(on)}$	V_S, V_D = 0 V, f = 1 MHz	Room		40		pF
Input Capacitance	C_{in}	f = 1 MHz, V_{IN} = 0 V	Room		6		pF
		f = 1 MHz, V_{IN} = 15 V	Room		7		pF
Off Isolation	OIRR	V_{IN} = 0 V, R_L = 1 kΩ V_S = 1 V_{rms}, f = 500 kHz	Room		62		dB
Crosstalk (Channel-to-Channel)	X_{TALK}	V_{IN} = 0 V, R_L = 1 kΩ V_S = 1 V_{rms}, f = 500 kHz	Room		74		dB
Power Supplies							
Positive Supply Current	I+	V_{IN} = 4 V (one input) all others = 0 V	Room Full		0.23	1	mA
Negative Supply Current	I-	V_{IN} = 4 V (one input) all others = 0 V	Room Full	- 100	- 0.001		µA
Positive Supply Current	I+	V_{IN} = 0.8 V (all inputs)	Room Full		0.001	100	µA
Negative Supply Current	I-	V_{IN} = 0.8 V (all inputs)	Room Full	- 100	- 0.001		µA

Notes:
a. Refer to PROCESS OPTION FLOWCHART.
b. Room = 25 °C, Full = as determined by the operating temperature suffix.
c. Typical values are for DESIGN AID ONLY, not guaranteed nor subject to production testing.
d. The algebraic convention whereby the most negative value is a minimum and the most positive a maximum, is used in this data sheet.
e. Guaranteed by design, not subject to production test.
f. V_{IN} = input voltage to perform proper function.

Stresses beyond those listed under "Absolute Maximum Ratings" may cause permanent damage to the device. These are stress ratings only, and functional operation of the device at these or any other conditions beyond those indicated in the operational sections of the specifications is not implied. Exposure to absolute maximum rating conditions for extended periods may affect device reliability.

TYPICAL CHARACTERISTICS (T_A = 25 °C, unless otherwise noted)

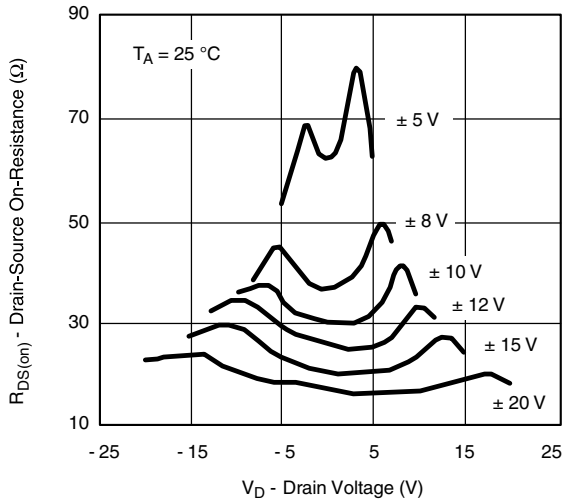

$R_{DS(on)}$ vs. V_D and Power Supply

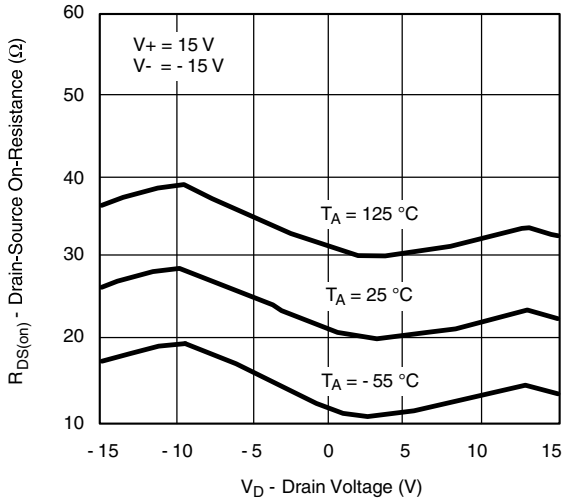

$R_{DS(on)}$ vs. V_D and Temperature

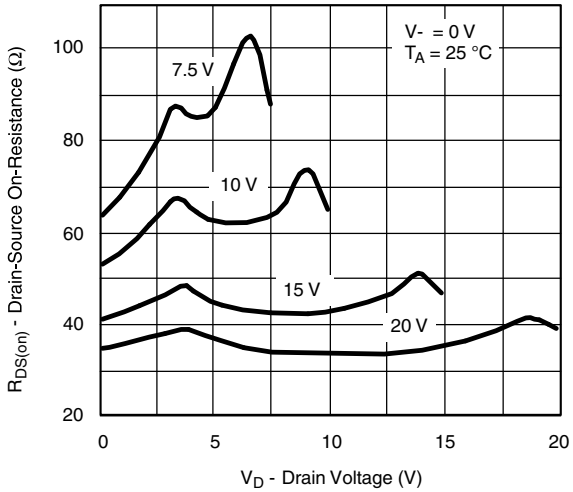

$R_{DS(on)}$ vs. V_D and Power Supply Voltage

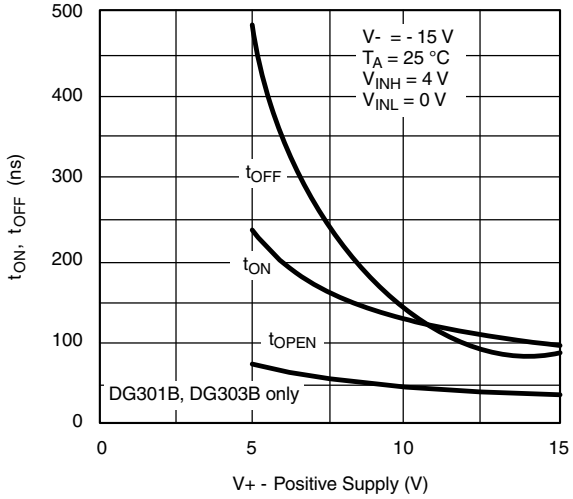

Switching Time and Break-Before-Make Time vs. Positive Supply Voltage

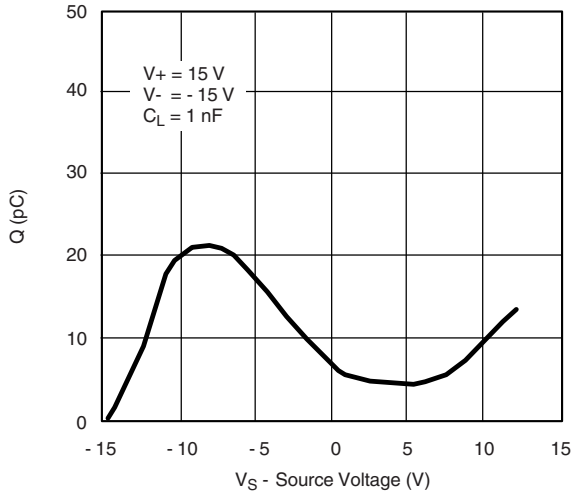

Charge Injection vs. Analog Voltage

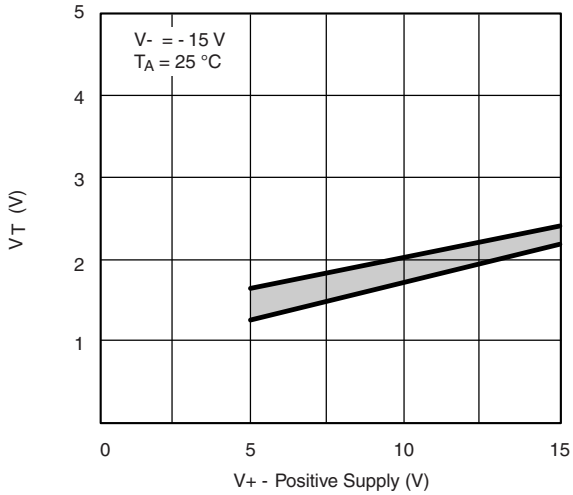

Input Switching Threshold vs. Positive Supply Voltage

TYPICAL CHARACTERISTICS (T_A = 25 °C, unless otherwise noted)

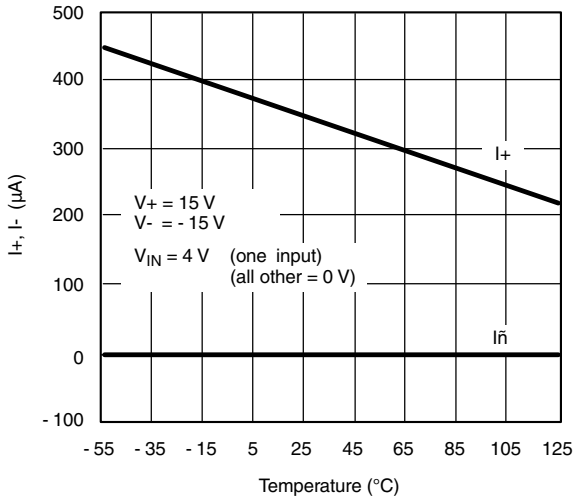

Supply Current vs. Temperature

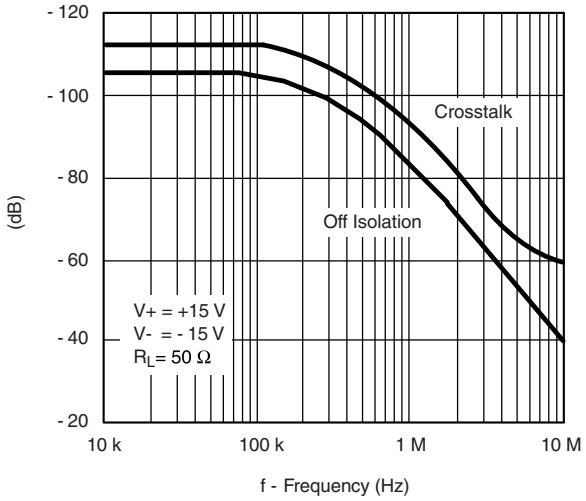

Off Isolation and Crosstalk vs. Frequency

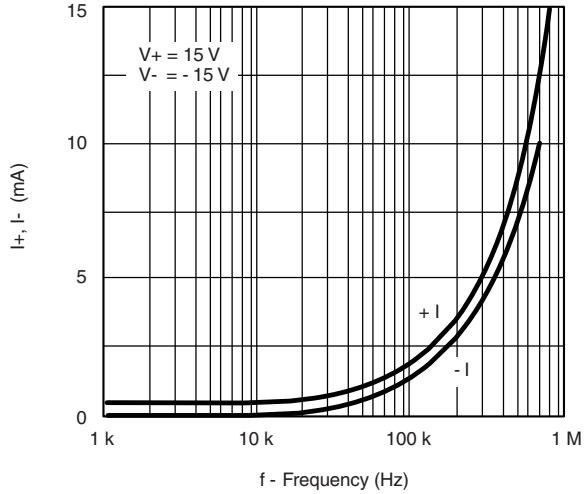

Supply Curents vs. Switching Frequency

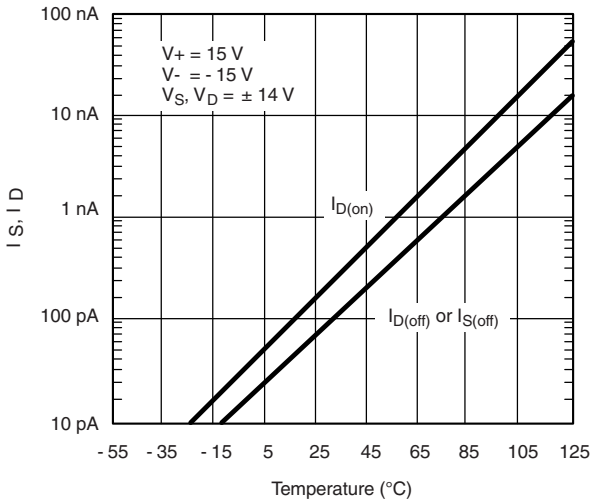

Leakage vs. Temperature

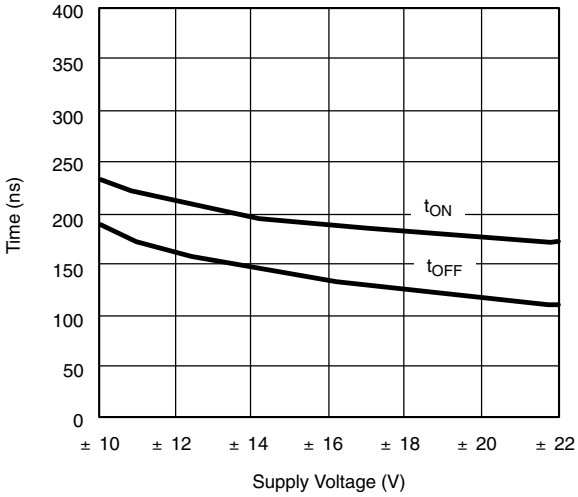

Switching Time vs. Power Supply Voltage

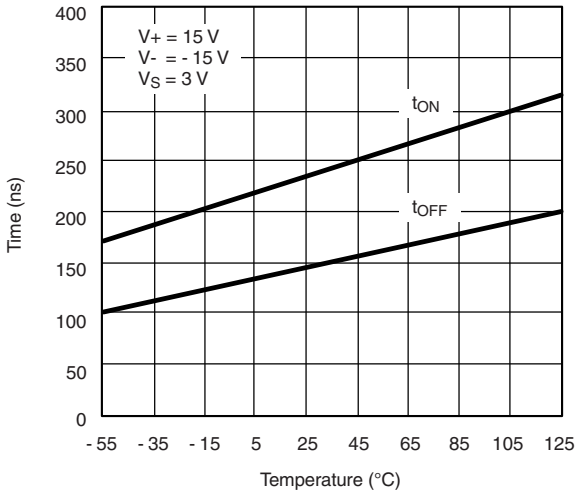

Switching Time vs. Temperature

TEST CIRCUITS

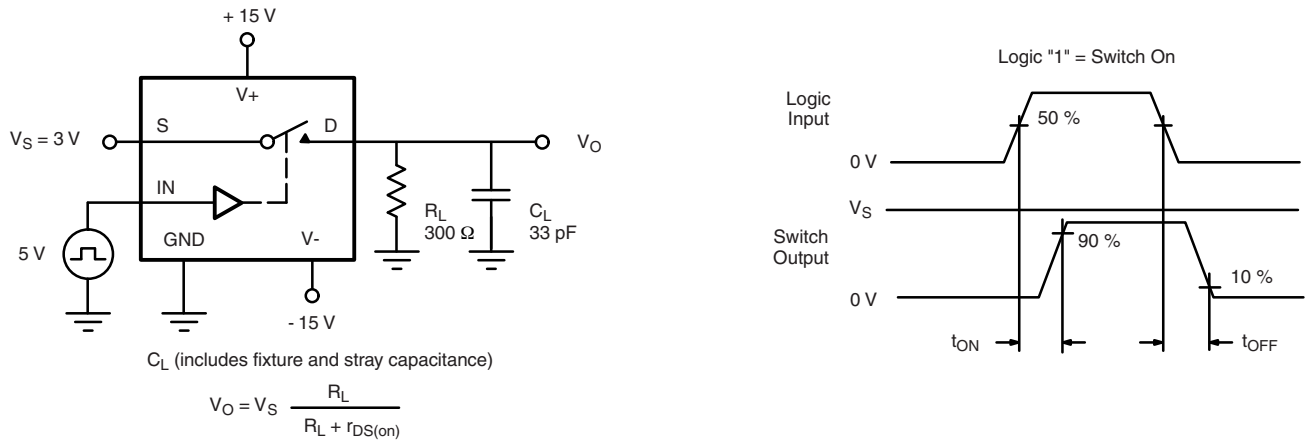

Figure 2. Switching Time

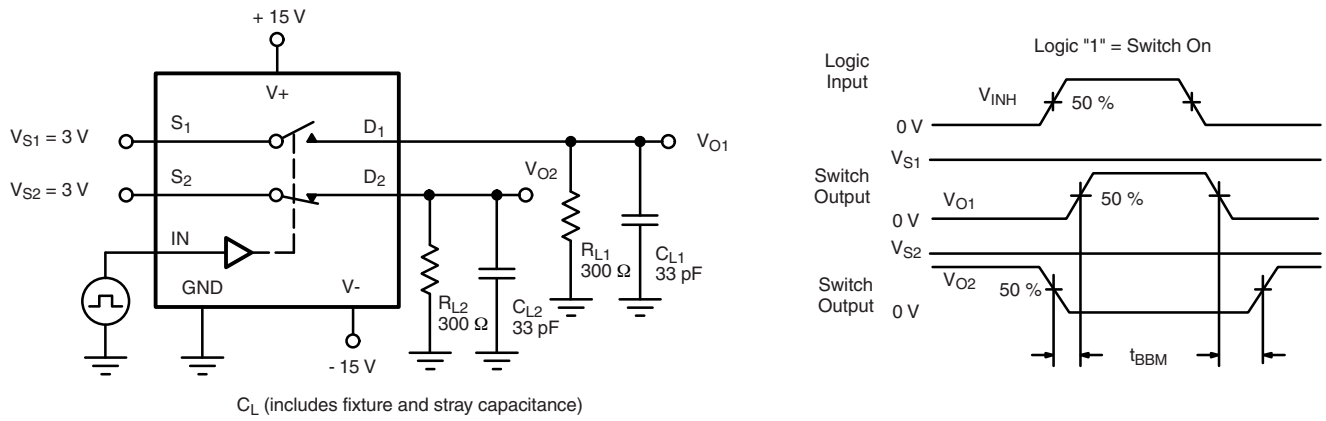

Figure 3. Break-Before-Make SPDT (DG301B, DG303B)

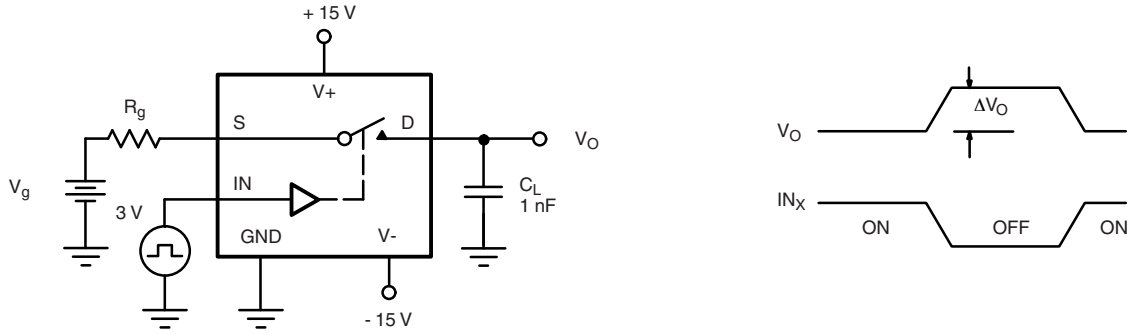

Figure 4. Charge Injection

APPLICATIONS HINTS[a]				
V+ Positive Supply Voltage (V)	V- Negative Supply Voltage (V)	GND Voltage (V)	V_{IN} Logic Input Voltage $V_{INH(min)}/V_{INL(max)}$ (V)	V_S or V_D Analog Voltage Range (V)
15	- 15	0	4/0.8	- 15 to 15
20	- 20	0	4/0.8	- 20 to 20
15	0	0	4/0.8	0 to 15

Notes:
a. Application hints are for DESIGN AID ONLY, not guaranteed and not subject to production testing.

APPLICATIONS

The DG300B series of analog switches will switch positive analog signals while using a single positive supply. This facilitates their use in applications where only one supply is available. The trade-offs of using single supplies are:

1) Increased $R_{DS(on)}$.
2) Slower switching speed. The analog voltage should not go above or below the supply voltages which in single operation are V+ and 0 V. (See Input Switching Threshold vs. Positive Supply Voltage Curve.)

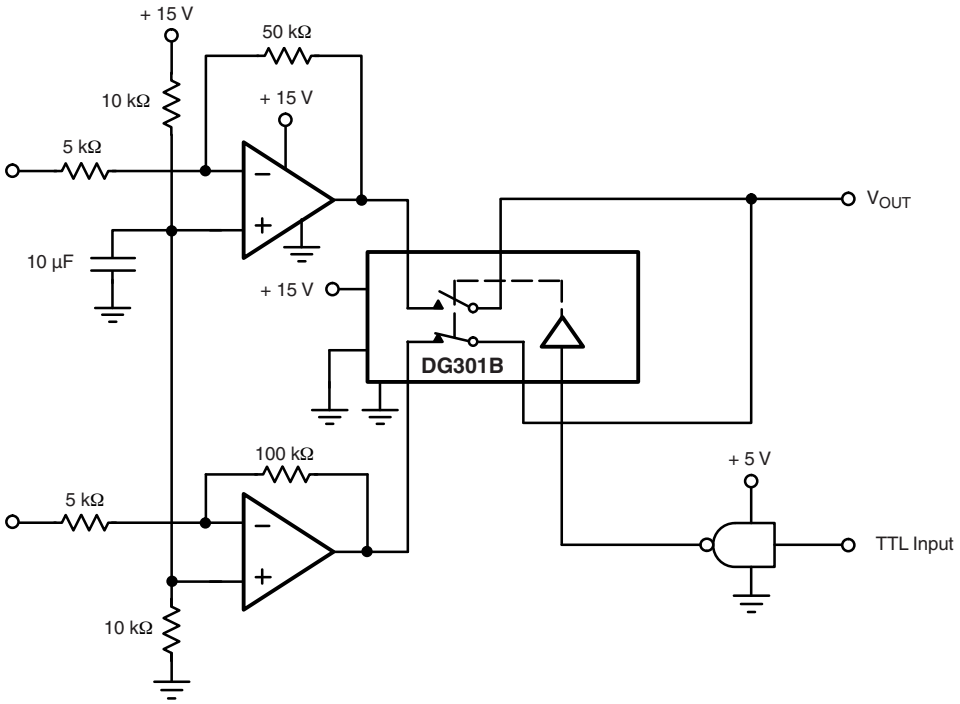

Figure 5. Single Supply Op. Amp. Switching

APPLICATIONS

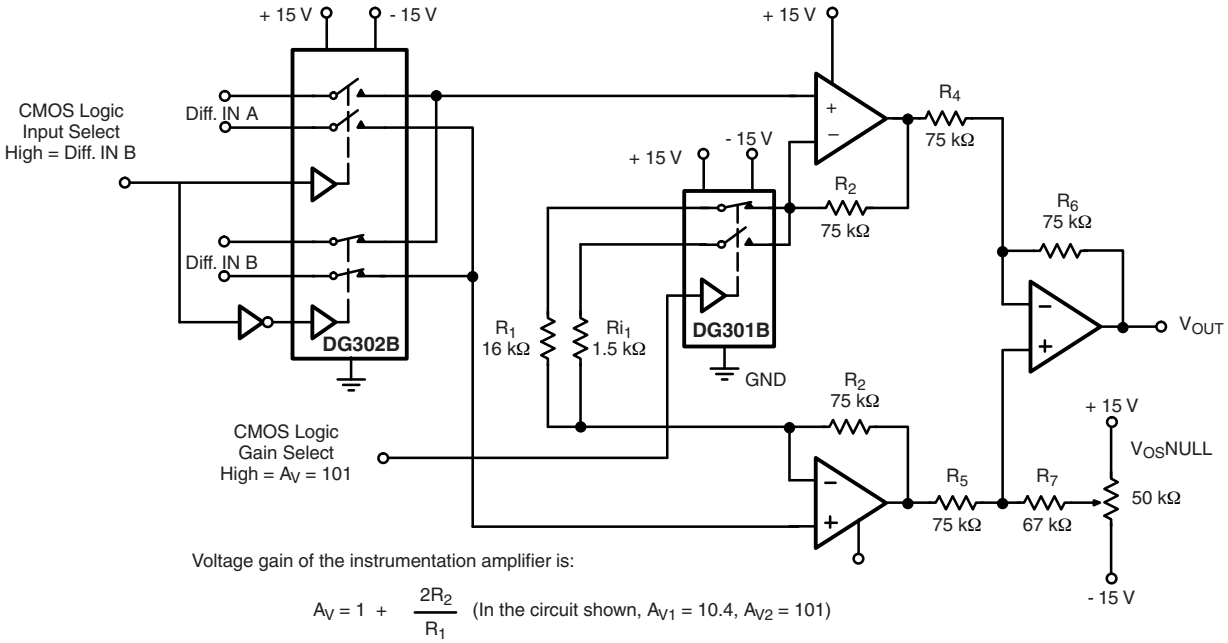

Figure 6. Low Power Instrumentation Amplifier with Digitally Selectable Inputs and Gain

Vishay Siliconix maintains worldwide manufacturing capability. Products may be manufactured at one of several qualified locations. Reliability data for Silicon Technology and Package Reliability represent a composite of all qualified locations. For related documents such as package/tape drawings, part marking, and reliability data, see www.vishay.com/ppg?71402.

Disclaimer

ALL PRODUCT, PRODUCT SPECIFICATIONS AND DATA ARE SUBJECT TO CHANGE WITHOUT NOTICE TO IMPROVE RELIABILITY, FUNCTION OR DESIGN OR OTHERWISE.

Vishay Intertechnology, Inc., its affiliates, agents, and employees, and all persons acting on its or their behalf (collectively, "Vishay"), disclaim any and all liability for any errors, inaccuracies or incompleteness contained in any datasheet or in any other disclosure relating to any product.

Vishay makes no warranty, representation or guarantee regarding the suitability of the products for any particular purpose or the continuing production of any product. To the maximum extent permitted by applicable law, Vishay disclaims (i) any and all liability arising out of the application or use of any product, (ii) any and all liability, including without limitation special, consequential or incidental damages, and (iii) any and all implied warranties, including warranties of fitness for particular purpose, non-infringement and merchantability.

Statements regarding the suitability of products for certain types of applications are based on Vishay's knowledge of typical requirements that are often placed on Vishay products in generic applications. Such statements are not binding statements about the suitability of products for a particular application. It is the customer's responsibility to validate that a particular product with the properties described in the product specification is suitable for use in a particular application. Parameters provided in datasheets and/or specifications may vary in different applications and performance may vary over time. All operating parameters, including typical parameters, must be validated for each customer application by the customer's technical experts. Product specifications do not expand or otherwise modify Vishay's terms and conditions of purchase, including but not limited to the warranty expressed therein.

Except as expressly indicated in writing, Vishay products are not designed for use in medical, life-saving, or life-sustaining applications or for any other application in which the failure of the Vishay product could result in personal injury or death. Customers using or selling Vishay products not expressly indicated for use in such applications do so at their own risk and agree to fully indemnify and hold Vishay and its distributors harmless from and against any and all claims, liabilities, expenses and damages arising or resulting in connection with such use or sale, including attorneys fees, even if such claim alleges that Vishay or its distributor was negligent regarding the design or manufacture of the part. Please contact authorized Vishay personnel to obtain written terms and conditions regarding products designed for such applications.

No license, express or implied, by estoppel or otherwise, to any intellectual property rights is granted by this document or by any conduct of Vishay. Product names and markings noted herein may be trademarks of their respective owners.