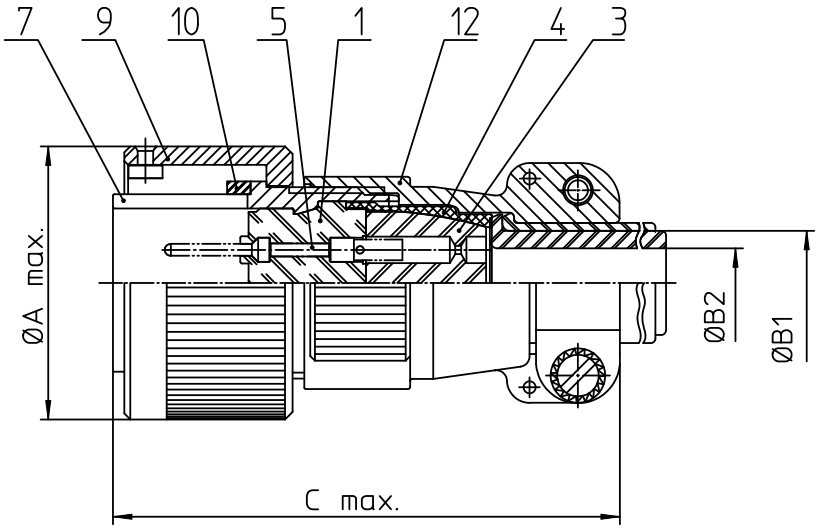

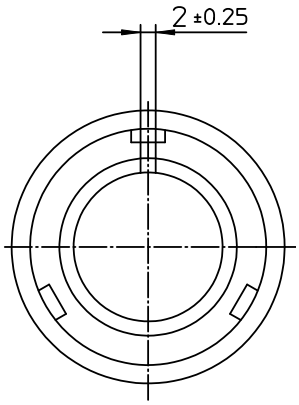

NO.	MASSE / DIMENSION
A	60.1
B1	26.8
B2	21.5
C	76

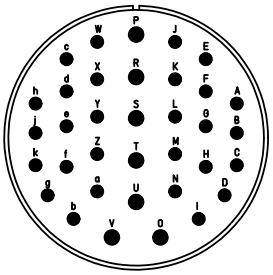

NO.	BESCHREIBUNG / DESCRIPTION
1	ISOLIERKÖRPER STIFT / INSULATOR PIN
3	DICHTKÖRPER / GROMMET
4	ENDRING / ENDRING
5	KONTAKTSTIFT/ CONTACT PIN
7	ZYLINDERGHÄUSE / BARREL
9	ÜBERWURFMUTTER / COUPLING NUT
10	DICHTRING FRONT / FRONT SEALING RING
12	ENDGEHÄUSE / ENDBELL

Note: Due to an automatic nomenclature system, numbers generated may not be sequential.

Notiz: Durch ein automatisches Benennungssystem können Nummerierungen entstehen, die nicht fortlaufend sind.

Material Specification:	
Shell Material:	Aluminium alloy
Shell Plating:	Olive drab chromate over cadmium plating
Insulator Material:	CR-Elastomere
Contact Material:	Copper alloy
Contact Plating:	Hard silver

all dimensions are in mm

Dimensions without tolerance indications are general tolerances in acc. with DIN7168m

drawing for CUSTOMER

ITT

Engineered for life

ITT CANNON GmbH
D - 71384 Weinstadt/Germany

description CA3106E32-7PWB-F80

Plug, straight

Endbell with clamp and bushing

AWG Crimp / Pin / Layout: 32-7

© All rights reserved, Reproduction or issue to third in any form whatever is only permitted with written authorization of ITT Cannon

page 1/1

revision 392 12. Apr 11

Downloaded from Elcodis.com electronic components distributor