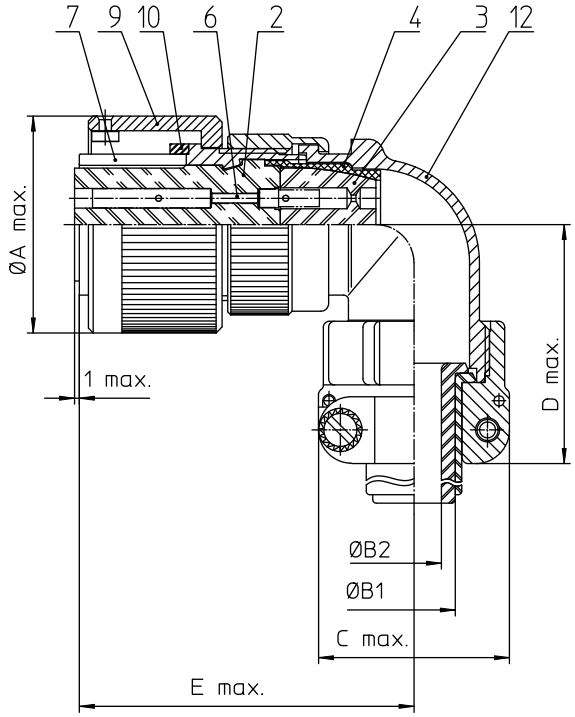

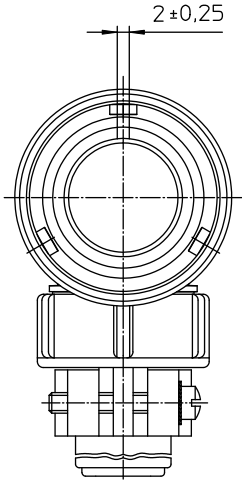

NO.	MASSE / DIMENSIO
A	46.6
B1	21.5
B2	16.6
C	43.3
D	58
E	66

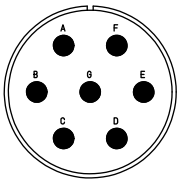

NO.	BESCHREIBUNG / DESCRIPTION
2	ISOLIERKÖRPER BUCHSE / INSULATOR SOCKET
3	DICHTKÖRPER / GROMMET
4	ENDRING / ENDRING
6	KONTAKTBUCHSE / CONTACT SOCKET
7	ZYLINDERGHÄUSE / BARREL
9	ÜBERWURFMUTTER / COUPLING NUT
10	DICHTRING FRONT / FRONT SEALING RING
12	ENDGEHÄUSE / ENDBELL

Note: Due to an automatic nomenclature system, numbers generated may not be sequential.

Notiz: Durch ein automatisches Benennungssystem können Nummerierungen entstehen, die nicht fortlaufend sind.

Material Specification:

Shell Material:	Aluminium alloy
Shell Plating:	Olive drab chromate over cadmium plating
Insulator Material:	CR-Elastomere
Contact Material:	Copper alloy
Contact Plating:	Hard silver

all dimensions are in mm

Dimensions without tolerance indications are general tolerances in acc. with DIN7168m

drawing for: CUSTOMER

ITT

Engineered for life

ITT CANNON GmbH
D - 71384 Weinstadt/Germany

description: CA3108E24-10S-B

Plug, 90°

Endbell with clamp and bushing

Solder Cup / Socket / Layout: 24-10

© All rights reserved. Reproduction or issue to third in any form whatever is only permitted with written authorisation of ITT Cannon

page 1/1

revision 392 12. Apr 11

Downloaded from Elcodis.com electronic components distributor