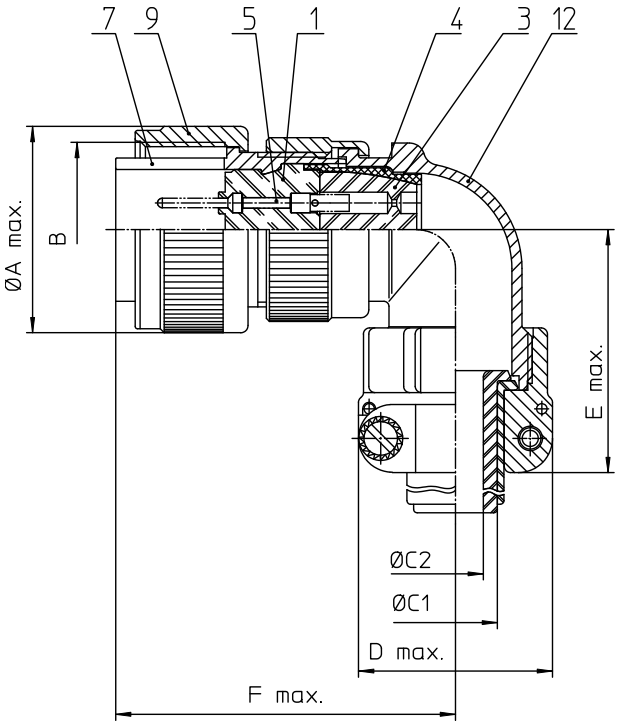

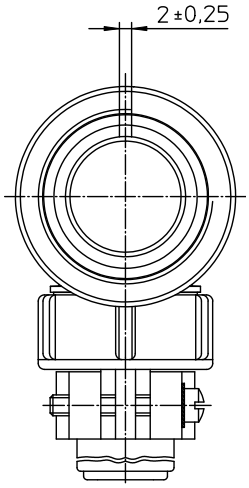

NO.	MASSE / DIMENSION
A	50.2
B	1 3/4-18NS-2B
C1	21.5
C2	16.6
D	43.3
E	58
F	66

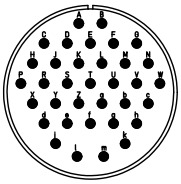

NO.	BESCHREIBUNG / DESCRIPTION
1	ISOLIERKÖRPER STIFT / INSULATOR PIN
3	DICHTKÖRPER / GROMMET
4	ENDRING / ENDRING
5	KONTAKTSTIFT/ CONTACT PIN
7	ZYLINDERGHÄUSE / BARREL
9	ÜBERWURFMUTTER / COUPLING NUT
12	ENDGEHÄUSE / ENDBELL

Note: Due to an automatic nomenclature system, numbers generated may not be sequential.

Notiz: Durch ein automatisches Benennungssystem können Nummerierungen entstehen, die nicht fortlaufend sind.

Material Specification:

Shell Material:	Aluminium alloy
Shell Plating:	Olive drab chromate coating over cadmium plating
Insulator Material:	Neoprene
Contact Material:	Copper alloy
Contact Plating:	Hard silver

all dimensions are in mm

Dimensions without tolerance indications are general tolerances in acc. with DIN7168m

drawing for: CUSTOMER

ITT

Engineered for life

ITT CANNON GmbH
D - 71384 Weinstadt/Germany

description: CA3108E28-15P-F80

Plug 90°

Endbell with clamp and bushing

AWG Crimp / Pin / Layout: 28-15

© All rights reserved, Reproduction or issue to third in any form whatever is only permitted with written authorization of ITT Cannon

page: 1/1

revision: 302 8. Feb 11

Downloaded from Elcodis.com electronic components distributor