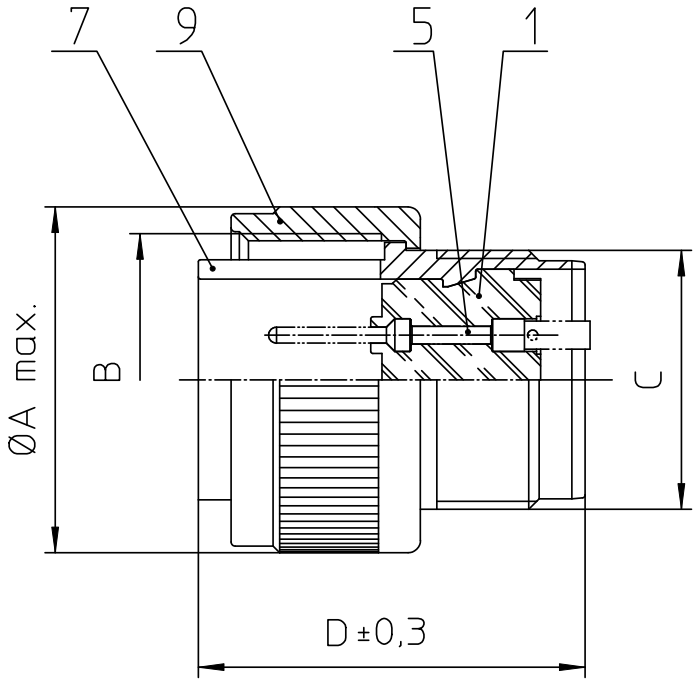


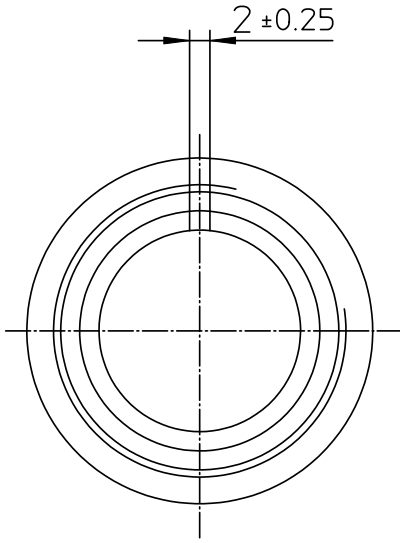


| NO. | MASSE / DIMENSIO |
|---|---|
| A | 31.8 |
| B | 1-20UNEF-2B |
| C | 7/8-20UNEF-2A |
| D | 37.7 |

| NO. | BESCHREIBUNG / DESCRIPTION |
|---|---|
| 1 | ISOLIERKÖRPER STIFT / INSULATOR PIN |
| 5 | KONTAKTSTIFT/ CONTACT PIN |
| 7 | ZYLINDERGHÄUSE / BARREL |
| 9 | ÜBERWURFMUTTER / COUPLING NUT |
| 10 | DICHTRING FRONT / FRONT SEALING RING |

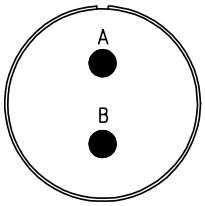


Note: Due to an automatic nomenclature system, numbers generated may not be sequential.

Notiz: Durch ein automatisches Benennungssystem können Nummerierungen entstehen, die nicht fortlaufend sind.

| Material Specification: | |
|---|---|
| Shell Material: | Aluminium alloy |
| Shell Plating: | Olive drab chromate coating over cadmium plating |
| Insulator Material: | Neoprene |
| Contact Material: | Copper alloy |
| Contact Plating: | Hard silver |

all dimensions are in mm

Dimensions without tolerance indications are general tolerances in acc. with DIN7168m

drawing for CUSTOMER

ITT

Engineered for life

ITT CANNON GmbH
D - 71384 Weinstadt/Germany

description CA3106E16-11PX-F80-F42

Plug, straight

without Endbell

AWG Crimp / Pin / Layout: 16-11

© All rights reserved. Reproduction or issue to third in any form whatever is only permitted with written authorization of ITT Cannon

page 1/1

revision 302 8. Feb 11

Downloaded from Elcodis.com electronic components distributor