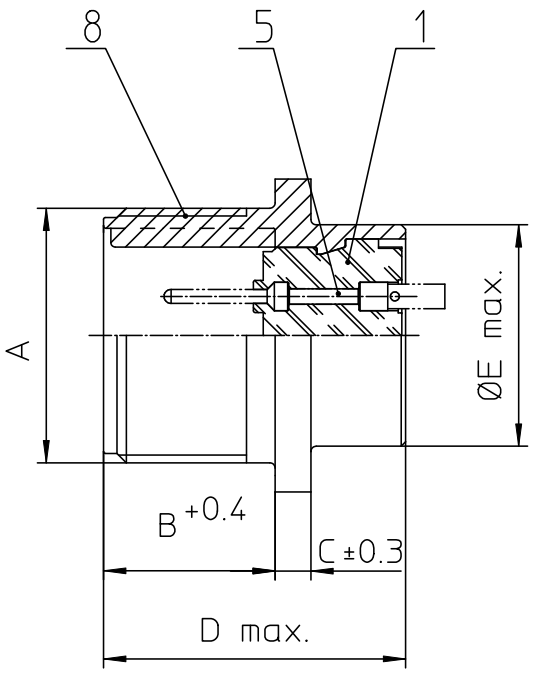

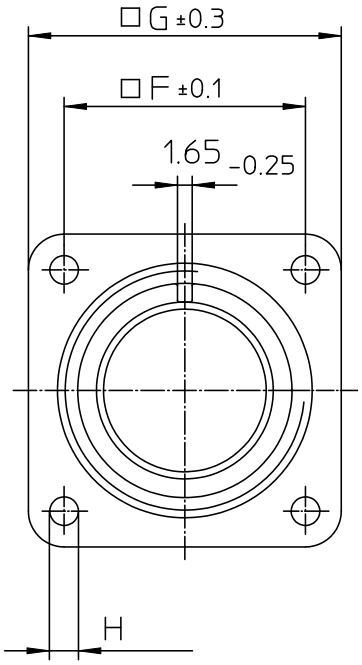

NO.	MASSE / DIMENSIO
A	1-20UNEF-2A
B	14.2
C	3.2
D	25.1
E	22.2
F	24.6
G	32.5
H	3.1

NO.	BESCHREIBUNG / DESCRIPTION
1	ISOLIERKÖRPER STIFT / INSULATOR PIN
5	KONTAKTSTIFT/ CONTACT PIN
8	DOSENGEHÄUSE / SHELL

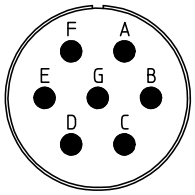

Note: Due to an automatic nomenclature system, numbers generated may not be sequential.

Notiz: Durch ein automatisches Benennungssystem können Nummerierungen entstehen, die nicht fortlaufend sind.

Material Specification:	
Shell Material:	Aluminium alloy
Shell Plating:	Olive drab chromate coating over cadmium plating
Insulator Material:	Neoprene
Contact Material:	Copper alloy
Contact Plating:	Hard silver

all dimensions are in mm

Dimensions without tolerance indications are general tolerances in acc. with DIN7168m

drawing for CUSTOMER

ITT

Engineered for life

ITT CANNON GmbH
D - 71384 Weinstadt/Germany

description CA3102E16S-1P

Box mounting receptacle

Solder Cup / Pin / Layout: 16S-1

© All rights reserved. Reproduction or issue to third in any form whatever is only permitted with written authorization of ITT Cannon

page 1/1

revision 302 8. Feb 11

Downloaded from Elcodis.com electronic components distributor