THIS DRAWING IS UNPUBLISHED. RELEASED FOR PUBLICATION -, -
© COPYRIGHT BY TYCO ELECTRONICS CORPORATION. ALL INTERNATIONAL RIGHTS RESERVED.

LOC	DIST
CM	00

REVISIONS

P	LTR	DESCRIPTION	DATE	DRN	APVD
	K1	REVISED PER ECO-08-019746	13AUG08	HMR	DC

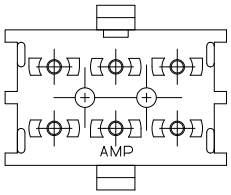

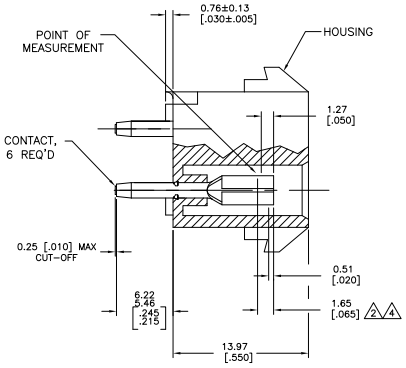

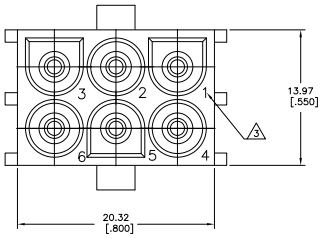

1 PARTS MUST COMPLY WITH AMP SOLDERABLITY SPEC 109-11-3.

2 CONTACT IS STAMPED FROM PRE-PLATED STOCK WHICH IS PLATED OVERALL WITH 0.00127 [.000050] NICKEL, THEN STRIPED WITH 0.00076 [.000030] GOLD IN CONTACT AREA INDICATED AND TIN-LEAD ON SOLDER TAIL END.

3 CIRCUIT IDENTIFICATION CHARACTERS ARE ADJACENT TO THE INDICATED CAVITIES, BUT LOCATION AND ORIENTATION MAY DIFFER FROM PRINT.

4 CONTACT IS PLATED OVERALL WITH 0.00127 [.000050] NICKEL, THEN 0.00076 [.000030] GOLD OVER CONTACT LENGTH INDICATED AND MATTE TIN ON SOLDER TAIL END.

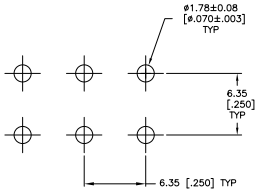

RECOMMENDED LAYOUT FOR 3.18 [.125] THICK PC BOARD

CONTACT	HOUSING	PART NO
PH BRZ GOLD 4	NYLON,UL 94V-0	350834-4
PH BRZ GOLD 2	NYLON,UL 94V-0	350834-2
PH BRZ TIN	NYLON,UL 94V-0	350834-1

THIS DRAWING IS A CONTROLLED DOCUMENT.

DIMENSIONS: mm [INCHES]

TOLERANCE UNLESS OTHERWISE SPECIFIED: 6 PLC ±, 5 PLC ±, 4 PLC ±, 3 PLC ±, 2 PLC ± 0.13 [.005], 1 PLC ±, ANGLES ±

MATERIAL: SEE TABLE

FINISH: SEE TABLE

DRN K. WHITAKER 11OCT2005
CHK S. RIDGILL 11OCT2005
APVD S. RIDGILL 11OCT2005

PRODUCT SPEC —

APPLICATION SPEC —

WEIGHT —

CUSTOMER DRAWING

Tyco Electronics
Tyco Electronics Corporation
Harrisburg, PA 17105-3608

NAME 6 CIRCUIT UNIVERSAL MATE-N-LOK (TM) P.C. BOARD SOCKET HEADER ASSEMBLY

SIZE A1 CAGE CODE 00779 DRAWING NO C-350834

RESTRICTED TO

SCALE 5:1 SHEET 1 OF 1 REV K1

METRIC

4806 (1/08)

Downloaded from Elcodis.com electronic components distributor