DRAWING MADE IN THIRD ANGLE PROJECTION

© COPYRIGHT 1975 BY AMP INCORPORATED, HARRISBURG, PA. ALL INTERNATIONAL RIGHTS RESERVED. AMP INCORPORATED PRODUCTS COVERED BY U.S. FOREIGN PATENTS AND/OR PATENTS PENDING.

LOC CM DIST 53

REVISIONS

P	F	ZONE	LTR	DESCRIPTION	DATE	APPROVED
✓	✓		A	REMOVED STICKER PER M-6833	2-3-82	MSF/AH
✓			A1	RESTORATION	4-18-85	KO/NJ
✓	✓		B	OBSOLETE -3,-4,-5,-6,-9, 1--2 & 1--5 PER CM-1160	6-6-88	PH/RS

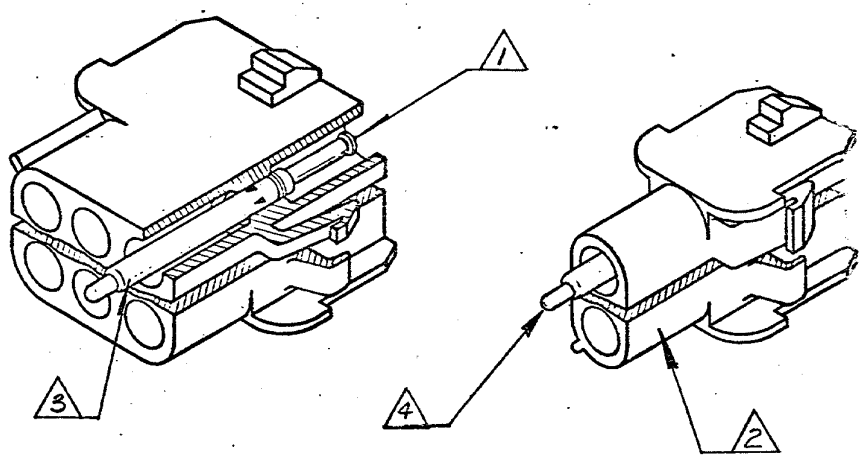

STYLE II

STYLE I

1. SPRING LOADED TEST PROBE
2. CAP HOUSING, MATERIAL-NYLON (94V-2 RATING), FINISH-NATURAL
3. TEST PROBE RECEPTACLE MATERIAL-BRASS, FINISH-PRE-TIN
4. ACCEPTS UNIVERSAL MATE-N-LOK SOCKETS.

STYLE	NO. OF CIRCUITS	PART NO
I	2	350773-2

UNLESS OTHERWISE SPECIFIED DIMENSIONS ARE IN INCHES. TOLERANCES ON: DECIMALS ± — ANGLES ± —

MATERIAL 2 3

FINISH 2 3

CONTRACT NO

DR D.C. WINGARD 8-15-75

CHK [illegible] 8/27/75

APPD R.R. Frantz 8/28/75

APPD

DSGN APPD

OTHER APPD

AMP INCORPORATED Harrisburg, Pa.

NAME UNIVERSAL MATE-N-LOK™ CAP TEST ASSEMBLY

SIZE B | CODE IDENT NO 00779 | DRAWING NO 350773

SCALE NTS | SHEET —

AMP 1470-15 (7-73)

CUSTOMER DRAWING

Downloaded from Elcodis.com electronic components distributor