THIS DRAWING IS UNPUBLISHED. RELEASED FOR PUBLICATION 20
DIFFUSION RESTREINTE. LIBRE A LA DIFFUSION
(C) COPYRIGHT 20 BY TYCO ELECTRONICS CORPORATION. ALL RIGHTS RESERVED.
TOUS DROITS RESERVES

FILS ADMISSIBLES (ACCEPTABLES WIRES)	
JAUGE (AWG) SECTION / 7 BRINS (7 STRANDS)	28-26 0.08-0.12mm^2
ISOLANT: ØMAX / MATIERE (INSUL.: Ø MAX / MAT'L)	Ø1/ PVC

LOC	DIST
F	7

REVISIONS

P	LTR	DESCRIPTION MODIFICATIONS	DATE	DWN DESS.	APVD APP.
	A	REDESSINE	86/90	AC	-
	B	REDESSINE SUR (REDRAWN ON) PRO/ENG	13SEP2002	CC	YP
	C	UPDATED	28MAR2007	TC	YP

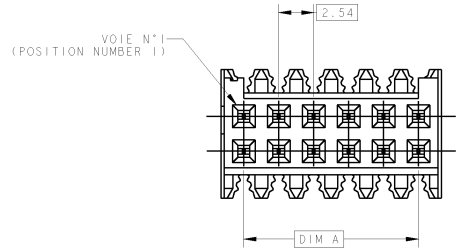

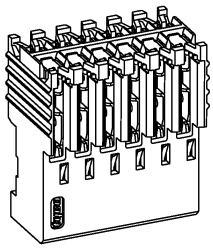

ECHELLE 4:1
SCALE

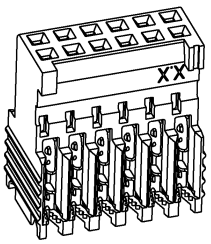

ECHELLE 4:1
SCALE

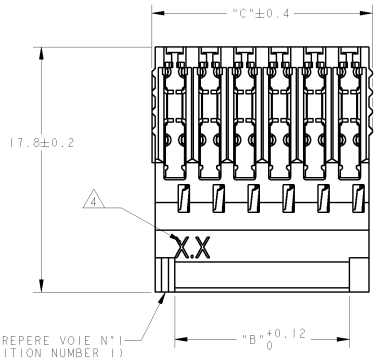

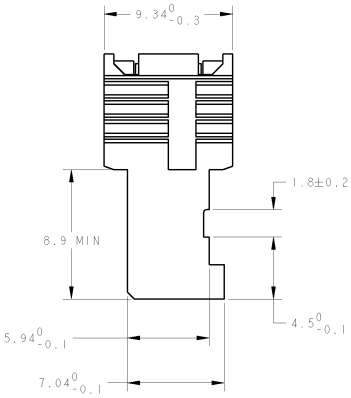

DIMENSIONS "C"	DIMENSIONS "A,B"	Nb DE POS.	REFERENCES (PART N°)
46.52	43.18	2x 18	1-281792-8 *
38.90	35.56	2x 15	1-281792-5 *
31.28	27.94	2x 12	1-281792-2 *
26.20	22.86	2x 10	1-281792-0 *
21.12	17.78	2x 8	0-281792-8 *
16.04	12.70	2x 6	0-281792-6 *
13.50	10.16	2x 5	0-281792-5 *
10.96	7.62	2x 4	0-281792-4 *
8.42	5.08	2x 3	0-281792-3 *
5.88	2.54	2x 2	0-281792-2

1 CES CONNECTEURS SONT PREVUS POUR ETRE ACCOUPLES AVEC LES EMBASES 'HE1402' DOUBLE RANGEE

(THESE CONNECTORS ARE DESIGNED TO BE MATED WITH 'HE1402' HEADERS DOUBLE ROW)
-

2 LES REFERENCES SUIVIES D'UN ' * ' SONT LES VERSIONS NORMALISEES SELON LA 'CEI 603-8'

(THE PART-No FOLLOWED BY ' * ' ARE COVERED BY THE INTERNATIONAL STANDARD 'IEC603-8')

3 REVETEMENT DES CONTACTS: ETAME

(CONTACTS PLATING: TIN)

4 "X.X" EST REMPLACE PAR LES DEUX DEUXIEME CHIFFRES DU COUPLE DES JAUGES AWG

("X.X" REPLACED BY THE TWO SECOND DIGIT OF AWG RANGE AS DEFINED IN TABLE)

5 MATIERES - BOITIER: PBT UL94V0
- CONTACTS: BRONZE PHOSPHOREUX.

(MATERIAL - HOUSING : PBT UL94V0
- CONTACTS: PHOSPHOR BRONZE)

THIS DRAWING IS CONTROLLED DOCUMENT FOR TYCO ELECTRONICS CORPORATION IT IS PRINTED ON DEMAND AND THE CONTROLLING ORGANIZATION SHOULD BE CONTACTED FOR THE LATEST REVISION.
CE PLAN EST UN DOCUMENT CONTROLE PAR AMP INCORPORATED. IL EST IMPRIME A LA DEMANDE ET ORGANISATION TECHNIQUE D'AMP DE FRANCE POUR DERNIER REVISION.

DIMENSIONS: mm

TOLERANCES UNLESS OTHERWISE SPECIFIED: TOLERANCES NON SPECIFIEES (SAUF MIS DE DECIMALES)
0 PLC/DEC: ±
1 PLC/DEC: ±0.3
2 PLC/DEC: ±
3 PLC/DEC: ±
4 PLC/DEC: ±
ANGLES: ±0°

MATERIAL/MATIERE: 5

FINISH/FINITION: 3

DWN/DESSINE 29NOV2000 J.C. COMBEDOUZON
CHK/VERIFIE 29NOV2000 J. CORRIOU
APVD/APROUVE 29NOV2000 Y. PETIONIN

PRODUCT SPEC SPEC. PRODUIT 108-15053
APPLICATION SPEC SPEC. APPLICATION 114-15031
WEIGHT MASSE APPROX. -

AMP DE FRANCE
95301 PONTOISE

NAME TITRE: HE 1402 PLUG, 180° IDC DOUBLE ROW
-

SIZE FORMAT: A2 | CAGE CODE | DRAWING NO No. PLAN: 00779 C-281792 | RESTRICTED TO RESERVE A: -

CUSTOMER DRAWING / PLAN CLIENT | UNIQUEMENT POUR REFERENCE | SCALE ECHELLE 5 : 1 | SHEET FEUILLE | OF DE | REV C

AMP 1471-9 REV 31MAR2000

Downloaded from Elcodis.com electronic components distributor