THIS DRAWING IS UNPUBLISHED. RELEASED FOR PUBLICATION -.-.-
© COPYRIGHT - BY TYCO ELECTRONICS CORPORATION. ALL RIGHTS RESERVED.

LOC	DIST
CM	00

REVISIONS

P	LTR	DESCRIPTION	DATE	DWN	APVD
	E	ECO-07-012892	22JUN07	KW	DB
	E1	REVISED PER ECO-09-024717	06NOV09	KK	AEG

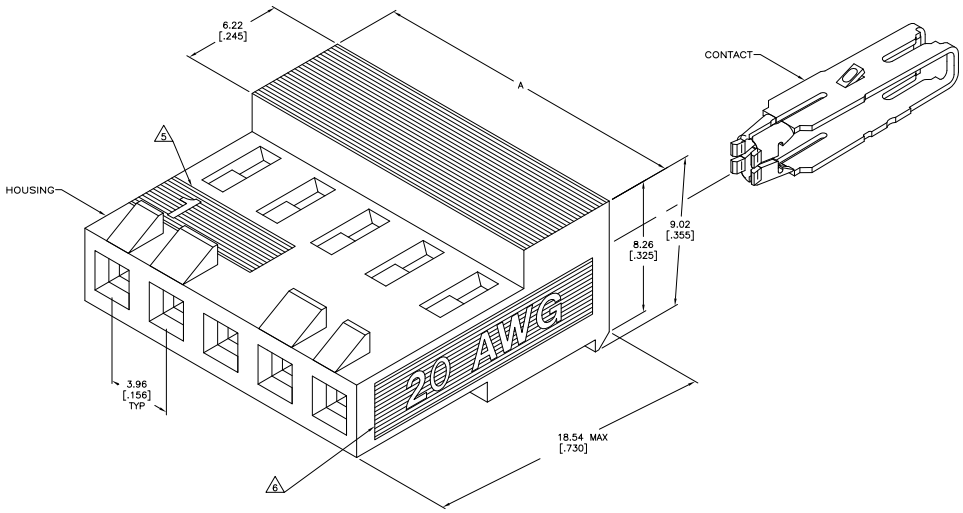

1. OPERATING TEMPERATURE: −55°C TO 105°C
2. MATERIAL: HOUSING, NYLON 6/6, UL 94V−0, BLACK
   CONTACT, 0.30 [.012] THICK COPPER ALLOY
3. FINISH: BRIGHT TIN−LEAD PLATE 0.00203−0.00508 [.000080−.000200"] THICK OR MATTE WHISKER MITIGATED TIN 0.00203 [.000080] MIN THICKNESS OVER NICKEL UNDERPLATE.
4. LUBRICATED WITH AMP ANTI−FRETTING LUBRICANT.
5. IDENTIFICATION NUMBER FOR FIRST CIRCUIT.
6. WIRE GAUGE IDENTIFICATION
7. DIMENSIONS IN BRACKETS ARE IN INCHES.
8. CONTACT MUST ACCEPT 1.14±0.03 [.045±.001] SQUARE POST AND REMAINED LOCKED IN POSITION.
9. OBSOLETE PARTS: OBSOLETE CIS STREAMLINING PER D.RENAUD/D.SINISI

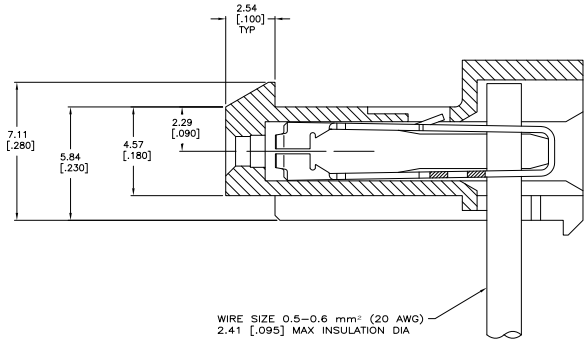

	FINISH	A		NO OF CKTS	PART NO
	TIN	47.55±0.30	[1.872±.012]	12	4−644370−2
	TIN	43.59±0.30	[1.716±.012]	11	4−644370−1
	TIN	39.62±0.30	[1.560±.012]	10	4−644370−0
	TIN	35.66±0.30	[1.404±.012]	9	3−644370−9
	TIN	31.70±0.30	[1.248±.012]	8	3−644370−8
	TIN	27.74±0.30	[1.092±.012]	7	3−644370−7
	TIN	23.77±0.30	[.936±.012]	6	3−644370−6
	TIN	19.81±0.30	[.780±.012]	5	3−644370−5
	TIN	15.85±0.15	[.624±.006]	4	3−644370−4
	TIN	11.89±0.15	[.468±.006]	3	3−644370−3
	TIN	7.92±0.15	[.312±.006]	2	3−644370−2
	TIN−LEAD	47.55±0.30	[1.872±.012]	12	~~1−644370−2~~
SUPERCEDED 9	TIN−LEAD	43.59±0.30	[1.716±.012]	11	~~1−644370−1~~
	TIN−LEAD	39.62±0.30	[1.560±.012]	10	~~1−644370−0~~
	TIN−LEAD	35.66±0.30	[1.404±.012]	9	~~644370−9~~
	TIN−LEAD	31.70±0.30	[1.248±.012]	8	644370−8
9 SUPERCEDED	TIN−LEAD	27.74±0.30	[1.092±.012]	7	~~644370−7~~
	TIN−LEAD	23.77±0.30	[.936±.012]	6	644370−6
	TIN−LEAD	19.81±0.30	[.780±.012]	5	644370−5
9 SUPERCEDED	TIN−LEAD	15.85±0.15	[.624±.006]	4	~~644370−4~~
	TIN−LEAD	11.89±0.15	[.468±.006]	3	644370−3
9 SUPERCEDED	TIN−LEAD	7.92±0.15	[.312±.006]	2	~~644370−2~~

THIS DRAWING IS A CONTROLLED DOCUMENT.

DIMENSIONS: mm [INCHES]

TOLERANCE UNLESS OTHERWISE SPECIFIED:
0 PLC ± –
1 PLC ± –
2 PLC ± –
3 PLC ± 0.13 [.005]
4 PLC ± –
ANGLES ± –

MATERIAL 2 FINISH 3

DWN	S. CARPENTER	14AUG2003
CHK	D. BOSSI	14AUG2003
APVD	D. BOSSI	14AUG2003

PRODUCT SPEC 108−1219
APPLICATION SPEC 114−1048
WEIGHT –

Tyco Electronics Corporation
Harrisburg, PA 17105−3608

NAME: MTA−156 CONNECTOR ASSEMBLY, QUAD, 20 AWG, WITH LOCKING RAMP

SIZE	CAGE CODE	DRAWING NO	RESTRICTED TO
A1	00779	C−644370	–

CUSTOMER DRAWING SCALE 10:1 SHEET 1 OF 1 REV E1

METRIC

AMP 4805 REV 21MAR2000

Downloaded from Elcodis.com electronic components distributor