PART NO.	ENG. NO.
18-12-2602	1900-1(P901)L
18-12-2601	1900-1(P901)

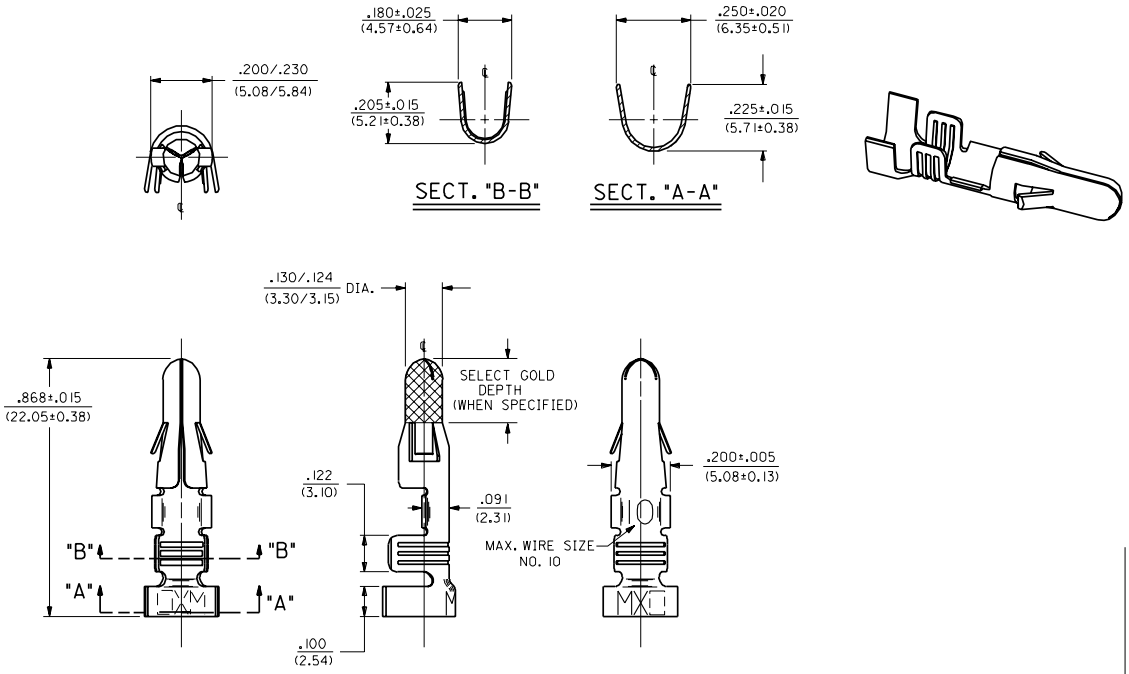

NOTES:

1. TERMINAL FOR USE WITH .125/(3.17) SERIES HOUSINGS AND WILL ACCEPT 10 THRU 14 AWG WIRE HAVING A .180/(4.57) MAX. DIAMETER INSULATION.
2. INSERTION FORCE: 6.0 LBS. MAX. WHEN TERMINAL IS INSERTED INTO .125/(3.17) DIA. CORE HOLE.
3. PULL OUT FORCE: 30 LBS. MIN. RETENTION IN HOUSING.

FINISH CODES:

901 HOT TIN DIP .000020/(0.0005 1) MIN.

MATERIAL NOTES:

1. CARTRIDGE BRASS, ALLOY #C26000; .013/(0.33) THICK, SPRING TEMPER

LEGEND

1900-1(****)*

VERSION — .180/(4.57) MAX. DIA. INSULATION

FORM — L=LOOSE

P=PREPLATE — BLANK=POSTPLATE

FINISH CODE — BLANK=CHAIN

LTR.	REVISIONS
D2	ADDED ISO VIEW UCR 1998-0248 WANG 98-05-20
D1	OBS. -1(555) & -1(555)L ECR U6 0379 9/21/95 RW
D	ADD SELECT AREA ECR #U0 0230 3-5-90 RW
C	ADD "NO P.S." PER ECR U9 1189 11-27-89 TRM
B	REV. & REDRAWN ECR U8 1602 GEP 6-6-88 RW

MFG. SH. REV. LTR.

REVISE ONLY ON CAD SYSTEM

DIMENSIONS SHOWN (METRIC) INCH

UNLESS OTHERWISE SPECIFIED TOLERANCES: ANGULAR ± 1/2° | 0

	INCH	METRIC
3 PLACE	± .010	---
2 PLACE	± .014	± 0.25
1 PLACE	---	± 0.35

DRAFT WHERE APPLICABLE MUST REMAIN WITHIN DIMENSIONS

DRWG. BY GEP | CHK'D. BY RW
APP'D. BY RAS | SCALE 4 : 1

TITLE CRIMP TERMINAL, MALE, .125/(3.17) DIA 10-14 AWG .180/(4.57) DIA. INSUL.

MOLEX INCORPORATED LISLE, ILL. U.S.A. 60532

SHEET NO. 1 OF 1 | DATE 6/30/88

PART NO. SEE CHART | DRWG. NO. SD-1900-1*

FILE NAME 51900X1 DGN

THIS DRAWING CONTAINS INFORMATION THAT IS PROPRIETARY TO MOLEX INC. AND SHOULD NOT BE USED WITHOUT WRITTEN PERMISSION

DIV. CP | SIZE C

NO P.S.

Downloaded from Elcodis.com electronic components distributor