THIS DRAWING IS UNPUBLISHED. RELEASED FOR PUBLICATION 2008
© COPYRIGHT 2008 BY TYCO ELECTRONICS CORPORATION. ALL RIGHTS RESERVED.

LOC	DIST
A1	-

REVISIONS

P	LTR	DESCRIPTION	DATE	DWN	APVD
	H5	Zeichnung ueberarbeitet	10.09.03	Brun	Blei
	H6	Spring dimple modified	15.08.05	Kone	Brun
	J	Option for TTD version added	11.11.08	Abr	Brun
	J1	DRAWING UPDATED	06APR09	Abr	Brun

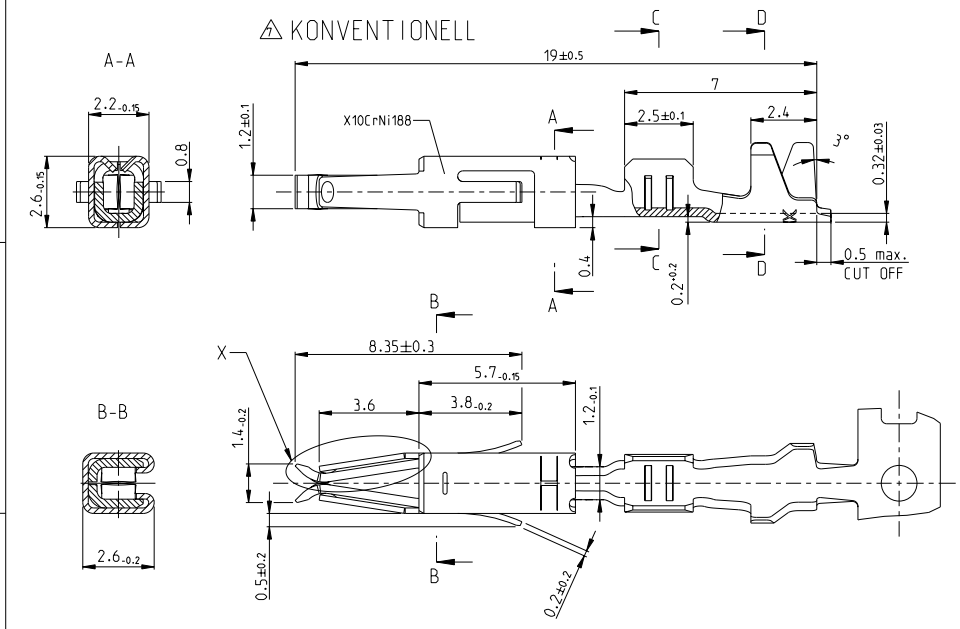

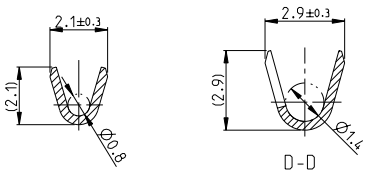

NOTES
Bemerkungen

1. SELECTIVE GOLD OVER NICKEL 0.8 µm MIN.
   selektiv vergoldet ueber Nickel 0.8 µm min.
2. TIN PLATED OVER NICKEL 0.2 µm MIN.
   verzinnt ueber Nickel 0.2 µm min.
3. SEL. GOLD OVER NICKEL ON BOTH SIDES MIN. 0.8 µm
   CANTILEVER SPRING GOLD PLATED ON BOTH SIDES
   sel vergoldet auf beiden Seiten mit min. 0.8 µm ueber Nickel
   Ueberfeder auf beiden Seiten vergoldet
4. SEL. GOLD OVER NICKEL ON CONTACT UPPER SIDE 0.8 µm MIN.
   WHOLE CANTILEVER SPRING GOLD PLATED ON BOTH SIDES
   sel. vergoldet auf der Kontaktoberseite 0.8 µm min. ueber Ni
   Ueberfeder komplett auf beiden Seiten vegoldet
5. ELECTRO TIN PLATED OVER NICKEL 1.0 µm MIN.
   gal. verzinnt ueber Nickel 1.0 µm min.
6. WIRE RANGE : 0.2 - 0.5 mm²
   INSULATION-Ø : 1.15 - 1.6 mm (FLR)
   Drahtgroessenbereich : 0.2 - 0.5 mm²
   Isolations-Ø : 1.15 - 1.6 mm (FLR)

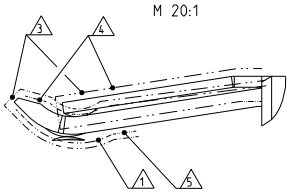

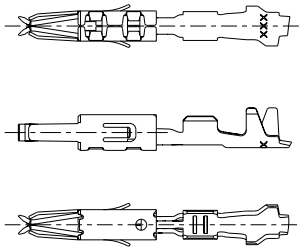

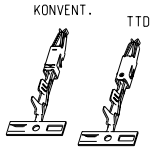

VERSION	LP NO	SURFACE / Oberflaeche	MATERIAL	PART NO	REV
7	962944-6	4 5 1	CuSn4	962942-6	J
7	962944-5	1 2	CuFe2	962942-5	J
7	962944-4	3 2	CuSn4	962942-4	J
7	962944-3	1 2	CuSn4	962942-3	J
8	962944-2	PRETIN	CuFe2	962942-2	J
8	962944-1	PRETIN	CuSn4	962942-1	J

THIS DRAWING IS A CONFIDENTIAL DOCUMENT OF TYCO ELECTRONICS CORPORATION. IT IS SUBJECT TO COPYRIGHT PROTECTION. UNAUTHORIZED REPRODUCTION SHOULD BE CONTACTED FOR THE LATEST REVISION.

DIMENSIONS: mm
TOLERANCES UNLESS OTHERWISE SPECIFIED: 0 PLC ±-, 1 PLC ±-, 2 PLC ±-, 3 PLC ±-, 4 PLC ±-, ±0.2, ANGLES ±2°
MATERIAL -
FINISH -

DWN M.Pfeilschifter 24-JUL-03
CHK M.Brunner 24-JUL-03
APVD M.Bleicher 24-JUL-03
PRODUCT SPEC 108-18055
APPLICATION SPEC 114-18081
WEIGHT 0.3 g
CUSTOMER DRAWING

Tyco Electronics
Tyco Electronics AMP GmbH
64625 Bensheim (Germany)

NAME
MICRO TIMER 2 CONTACT
Micro Timer 2 Kontakt
-

SIZE	CAGE CODE	DRAWING NO	RESTRICTED TO
A2	00779	C-962942	-

SCALE 10:1 SHEET 1 OF 1 REV J1

AMP 1471-9 REV 31MAR2000
Pro/ENGINEER DRAWING

Downloaded from Elcodis.com electronic components distributor