DRAWING MADE IN THIRD ANGLE PROJECTION

© COPYRIGHT 1978 BY AMP INCORPORATED, HARRISBURG, PA. ALL INTERNATIONAL RIGHTS RESERVED. AMP INCORPORATED PRODUCTS COVERED BY U. S. AND FOREIGN PATENTS AND/OR PATENTS PENDING.

MOD 27 | LOC AD | DIST 39

REVISIONS

P	F	ZONE	LTR	DESCRIPTION	DATE	APPROVED
	✓		0	RELEASE		
			A	REVISED PER ECN 2481 DIF	5-29-78	[illegible]
A1	✓		A1	REV ECN 202 [illegible]	6-4-81	RM
A2			A2	REV ECN 1863 [illegible]	9/10/88	SB
B	✓		B	RE-RELEASE - 7 OK	8-15-88	[illegible]
	✓		C	ADDED - 6 & - 8 PER 2745 & AR2373 CO	4-18-89	MPC
✓	✓		D	REV LOC & DIST AD-4171	11-29-89	BF
✓			E	OBS - 8 PER 0010-0724-93 JH	8-12-93	SAS
✓			F	REV PER 0010-1545-93	1-10-94	SAS
✓			G	REV PER 0010-1125-94	12-14-94	JH
✓			H	REV PER 0010-0847-96	6-3-96	CB/JH
			J	REV PER 0G3C-0062-00	11 Feb 06	MZ

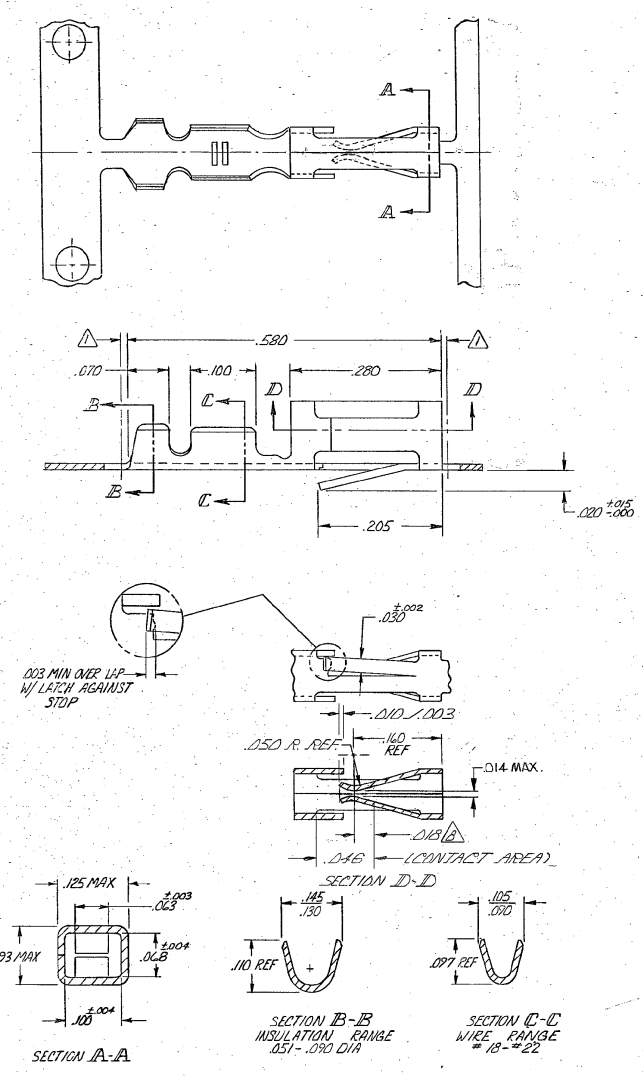

1. .010 MAX CUT-OFF TAB FOR LOOSE PIECE.
2. GOLD FLASH OVER .000050 NICKEL ENTIRE CONTACT, .000015 GOLD ON CONTACT AREA
3. GOLD FLASH OVER .000050 NICKEL ENTIRE CONTACT .000030 GOLD ON CONTACT AREA.
4. .000016 MIN TIN.
5. LUBRICATED
6. .000015 GOLD ON CONTACT AREA, .000050 - .000100 BRIGHT TIN-LEAD ON TERMINATION AREA, ALL OVER .000050 NICKEL ENTIRE TERMINAL.
7. .000030 GOLD ON CONTACT AREA, .000050 - .000100 BRIGHT TIN-LEAD ON TERMINATION AREA, ALL OVER .000050 NICKEL ENTIRE TERMINAL.
8. POINT OF MEASUREMENT FOR PLATING THICKNESS.
9. OBSOLETED PART NUMBER
10. .000030 GOLD OVER NICKEL ON ENTIRE CONTACT.
11. SUPERSEDED BY 102099-2

102099

FINISH	LOOSE PIECE P/N	PART NO
10	102103-6 9	102099-8 11
7	9 102103-5	102099-7 11
6 9	102103-4	102099-6 9
4 5	102103-3	102099-5
3	102103-2	102099-2
2	9 102103-1	102099-1 9

UNLESS OTHERWISE SPECIFIED DIMENSIONS ARE IN INCHES.
TOLERANCES ON:
DECIMALS ±.005
ANGLES ±

MATERIAL: PHOS. BRONZE

FINISH: SEE TABLE

CONTRACT NO

DR: [signature] 4-12-78

CHK: [signature] 4-27-78

APPD: [signature] 4/28/78

APPD: R. Bennett 5/1/78

DSGN APPD

OTHER APPD

AMP INCORPORATED Harrisburg, Pa.

NAME: CONTACT, MOD I, RECEPTACLE, CRIMP SNAP-IN, STD. PRESSURE, #18 - #22 AWG, SIDE FEED

SIZE	CODE IDENT NO	DRAWING NO
C	00779	102099

SCALE — SHEET —

AMP 1471-6 (7-73)

CUSTOMER DRAWING

Downloaded from Elcodis.com electronic components distributor