DRAWING MADE IN KOREAN PROJECTION

DIMENSIONS IN·MM

CUSTOMER DRAWING

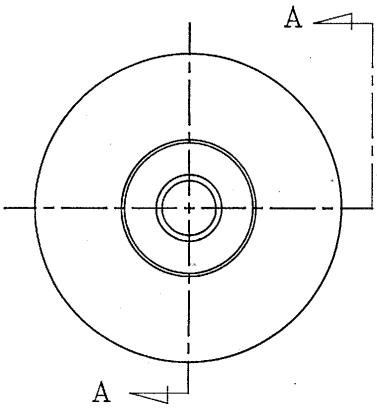

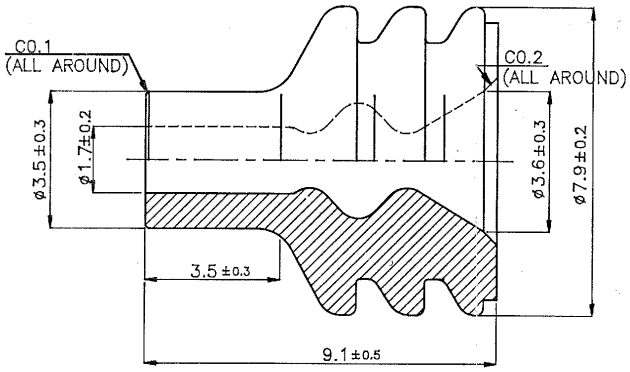

SECTION A–A

* NOTE *

1. APPLICABLE CONTACT P/N : 175087 , 175090.
2. APPLICABLE HSG P/N : 176143 , 176146.

GREY	85024–1
COLOR	PART NO.

GENERAL TOLERANCES	
10 MAX	±0.2
10 OVER 30 MAX	±0.25
30 OVER 100 MAX	±0.3
ANGLES	±3°

LTR	REVISION RECORD	DR	CHK	DATE
O	RELEASED(P93–042)	JK	CS	4/19/93

© 19 AMP MFG KOREA
ALL RIGHT RESERVED AMP PRODUCTS COVERED BY PATENTS AND OR PATENTS PENDING

AMP * AMP MFG KOREA

WIRE RANGE 0.3–1.25 mm²	INSULATION DIA ø1.6 – ø2.9mm	NAME RUBBER PLUG FOR 187 SEALED CONNECTOR	
MATERIAL NBR	FINISH/COLOR SEE TABLE	TOLERANCES 0<X)<10 ±0.2; 10≤X)<30 ±0.25; 30≤X)<100 ±0.3; ANGLES ±3	SIZE A3 / LOC DS / NO 85024
DR EH HONG	APP CS LEE		
CHK JK SONG	REL JK SONG		SCALE 10/1 / REV O / SHEET 1/1

AMP–ME–002(REV. 9/92)

DO NOT SCALE PRINT

PRINT DIST

Downloaded from Elcodis.com electronic components distributor