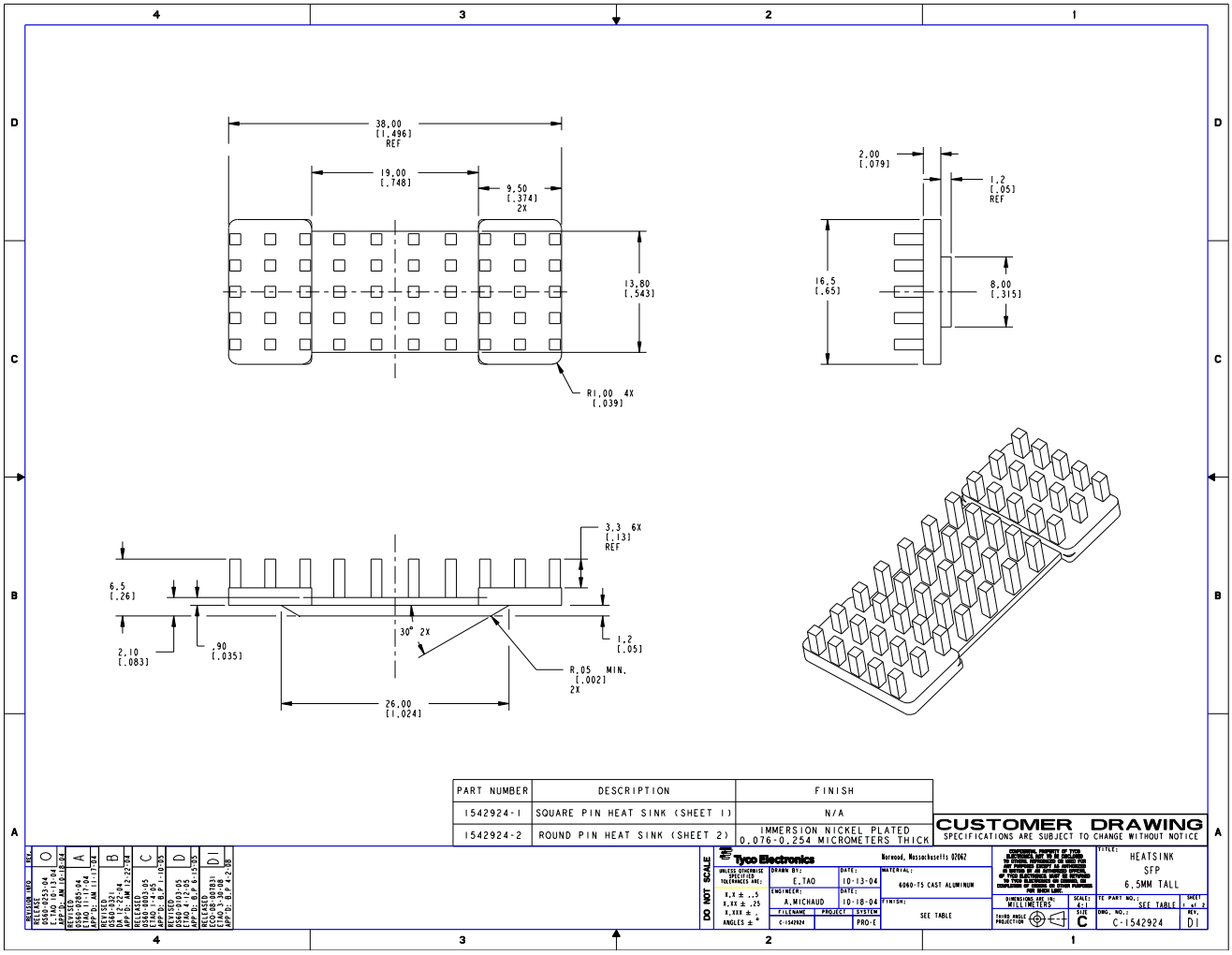

PART NUMBER	DESCRIPTION	FINISH
1542924-1	SQUARE PIN HEAT SINK (SHEET 1)	N/A
1542924-2	ROUND PIN HEAT SINK (SHEET 2)	IMMERSION NICKEL PLATED 0,076-0,254 MICROMETERS THICK

CUSTOMER DRAWING
SPECIFICATIONS ARE SUBJECT TO CHANGE WITHOUT NOTICE

REVISION INFO	REV.
RELEASE 0560-0233-04 E.TAO 10-13-04 APP'D: AM 10-18-04	O
RELEASE 0560-0285-04 E.TAO 11-17-04 APP'D: AM 11-17-04	A
REVISED 0560-0321 A.WAZZAN 12-22-04 APP'D: AM 12-22-04	B
RELEASED 0560-0405-05 E.TAO 1-4-05 APP'D: AM 1-4-05	C
REVISED 0560-0103-05 E.TAO 4-25-05 APP'D: B.P.R. 4-25-05	D
RELEASED (CO-0-0-0823) E.TAO 3-30-08 APP'D: B.P.R. 4-2-08	D1

DO NOT SCALE

Tyco Electronics
Norwood, Massachusetts 02062

CONFIDENTIAL PROPERTY OF TYCO ELECTRONICS. THIS DOCUMENT IS TO REMAIN CONFIDENTIAL & IS NOT TO BE USED FOR ANY PURPOSE EXCEPT AS AUTHORIZED IN WRITING BY AN AUTHORIZED REPRESENTATIVE OF TYCO ELECTRONICS. NOT TO BE REPRODUCED IN WHOLE OR IN PART WITHOUT THE CONSENT OF TYCO ELECTRONICS.

UNLESS OTHERWISE SPECIFIED TOLERANCES ARE:	DRAWN BY: E.TAO	DATE: 10-13-04	MATERIAL: 6060-T5 CAST ALUMINUM
X.X ± .5 X.XX ± .25 X.XXX ± . ANGLES ± °	ENGINEER: A.MICHAUD	DATE: 10-18-04	FINISH: SEE TABLE
	FILENAME: C-1542924	PROJECT:	SYSTEM: PRO-E

TITLE: HEATSINK SFP 6.5MM TALL

DIMENSIONS ARE IN: MILLIMETERS	SCALE: 4-1	TE PART NO.: SEE TABLE	SHEET 1 of 2
THIRD ANGLE PROJECTION	SIZE: C	DWG. NO.: C-1542924	REV. D1

Downloaded from Elcodis.com electronic components distributor

NOTES:

UNLESS OTHERWISE SPECIFIED

1. INTERPRET DRAWING PER ASME Y14.5M-1994
2. VARIATION IN PLATING COLOR IS NORMAL AND ALLOWED.
3. MAXIMUM PIN LEAN OF 8° IN ANY DIRECTION.
4. 0.2mm MAXIMUM BURR ALLOWED.
5. RoHS COMPLIANT AND CERTIFIED.

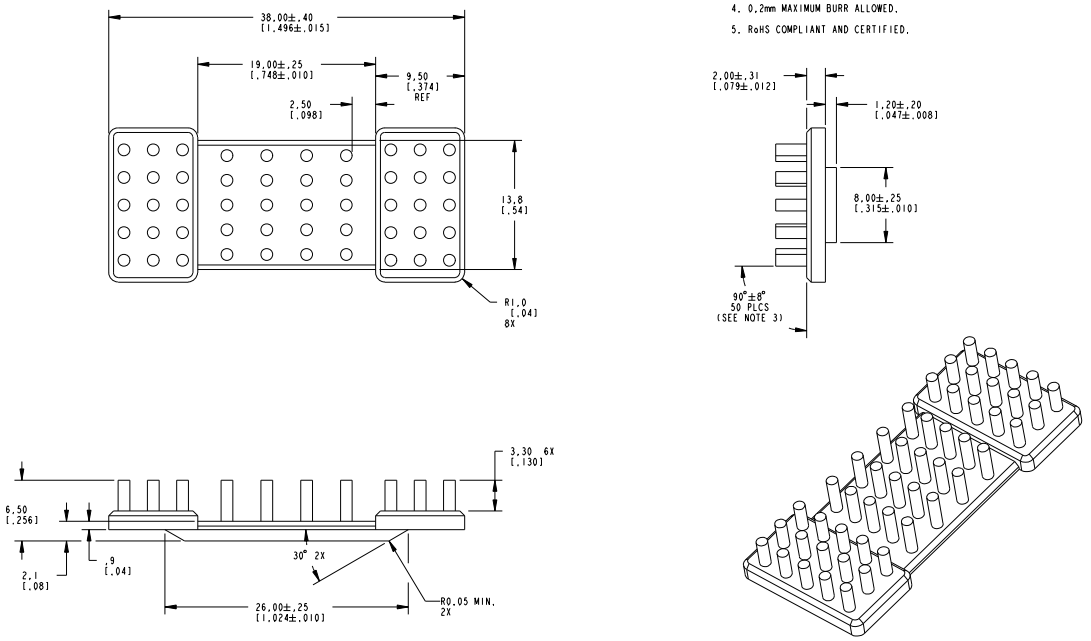

CUSTOMER DRAWING
SPECIFICATIONS ARE SUBJECT TO CHANGE WITHOUT NOTICE

REVISION IND: REV. SEE SHEET 1

DO NOT SCALE

Tyco Electronics — Norwood, Massachusetts 02062

UNLESS OTHERWISE SPECIFIED TOLERANCES ARE:
X.X ± .5
X.XX ± .25
X.XXX ± .
ANGLES ± °

DRAWN BY:	DATE:	MATERIAL:
E.TAO	10-13-04	6063-T5 CAST ALUMINUM
ENGINEER:	DATE:	FINISH:
A.MICHAUD	10-18-04	SEE TABLE
FILENAME / PROJECT / SYSTEM		
C-1542924 / . / PRO/E		

CONFIDENTIAL PROPERTY OF TYCO ELECTRONICS CORPORATION. THIS DOCUMENT IS TO BE USED, REPRODUCED OR AS NEED FOR ANY PURPOSE EXCEPT AS AUTHORIZED IN WRITING BY AN AUTHORIZED REPRESENTATIVE OF TYCO ELECTRONICS. NOT TO BE REVEALED TO PERSONS OUTSIDE YOUR COMPANY OR ORGANIZATION OR COPIED OR OTHER PURPOSES FOR WHICH LENT.

DIMENSIONS ARE IN: MILLIMETERS
SCALE: 4-1
SIZE: C
THIRD ANGLE PROJECTION

TITLE: HEATSINK SFP 6.5MM TALL

TE PART NO.: 1542924-2
SHEET 2 of 2
DWG. NO.: C-1542924
REV. D1

Downloaded from Elcodis.com electronic components distributor