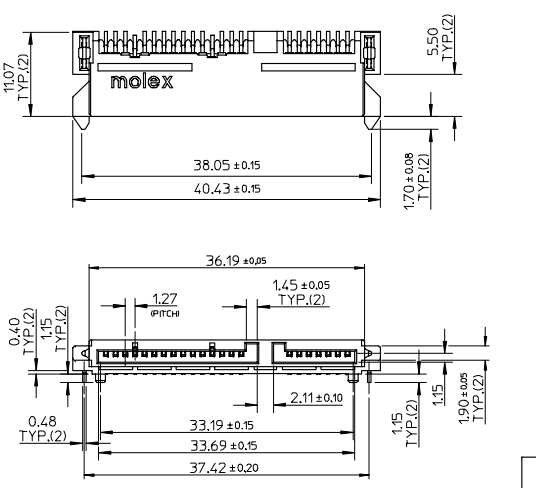

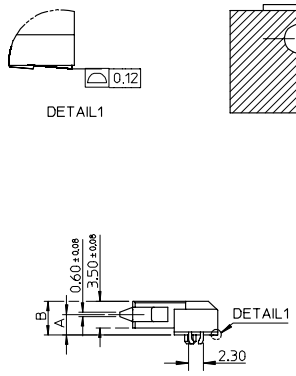

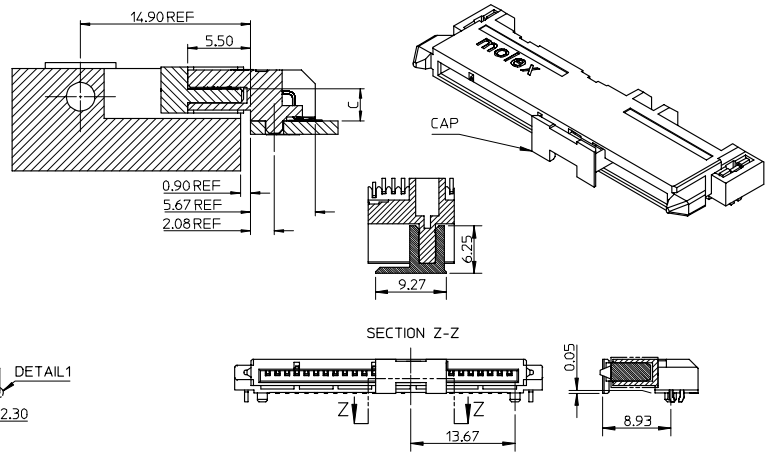

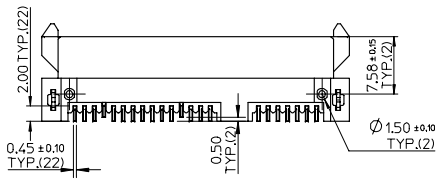

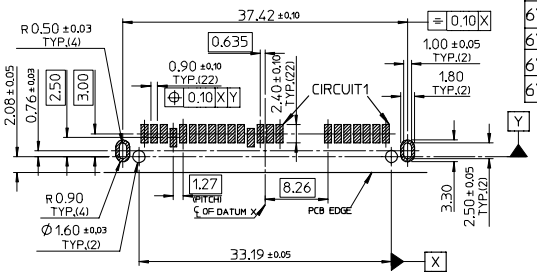

RECOMMENDED P.C.B. LAYOUT (THICKNESS=1.2mm)

CONNECTOR SIDE

P/N	PLATING	DIM'A'	DIM'B'	DIM'C'	HUSING COLOR	REMARK
67492-1630	NOTES 2 (A)	2.70	4.45	2.80	BLACK	WITH CAP
67492-1631	NOTES 2 (B)					
67492-1632	NOTES 2 (C)					
67492-1730	NOTES 2 (A)	1.95	3.70	2.05	WHITE	
67492-1731	NOTES 2 (B)					
67492-1732	NOTES 2 (C)					
67492-1620	NOTES 2 (A)	2.70	4.45	2.80	BLACK	WITHOUT CAP
67492-1621	NOTES 2 (B)					
67492-1622	NOTES 2 (C)					
67492-1720	NOTES 2 (A)	1.95	3.70	2.05	WHITE	
67492-1721	NOTES 2 (B)					
67492-1722	NOTES 2 (C)					

NOTES:
1.MATERIAL:
HOUSING: HIGH TEMPERATURE THERMAL PLASTIC, UL94V-0, COLOR: REFER TO TABLE IN SHEET 2.
TERMINAL: COPPER ALLOY;
FORKLOCK: COPPER ALLOY.
2.TERMINAL PLATING :
CONTACT AREA:
(A) GOLD FLASH;
(B) GOLD, THICKNESS=0.76 MICRONS MINIMUM;
(C) GOLD, THICKNESS=0.38 MICRONS MINIMUM;
SOLDER AREA: TIN, THICKNESS=1.27 MICRONS MINIMUM;
UNDER PLATE: NICKEL, THICKNESS=1.27 MICRONS MINIMUM.
3.FORKLOCK PLATING:
SOLDER AREA: TIN, THICKNESS=1.27 MICRONS MINIMUM,
UNDER PLATE: NICKEL, THICKNESS=1.27 MICRONS MINIMUM.
4.PRODUCT SPECIFICATION: REFER TO PS-67492-001.
5.PACKAGING METHOD: TAPE REEL, 67492-163* REFER TO PK-67492-005, 67492-173* REFER TO PK-67492-006.
6.MATING PARTS: 87703/87672.

REV	DESCRIPTION	EC NO:	DRWN:GLLI	CHKD:	APPR:GRMA
B	RTM		2006/02/08	2006/02/28	2006/03/01

QUALITY SYMBOLS: ▼=0 ▽=0

GENERAL TOLERANCES (UNLESS SPECIFIED)

	mm	INCH
4 PLACES	± ---	± ---
3 PLACES	± ---	± ---
2 PLACES	± 0.15	± ---
1 PLACE	± 0.25	± ---
ANGULAR ± 3 °		

DRAFT WHERE APPLICABLE MUST REMAIN WITHIN DIMENSIONS

DIMENSION STYLE: MM ONLY
SCALE: 2:1
DESIGN UNITS: METRIC
THIRD ANGLE PROJECTION

		DATE
DRAWN BY	DIXON LI	2005/12/22
CHECKED BY	JANNY ZENG	2005/12/22
APPROVED BY	GRATE MA	2005/12/22

TITLE: SATA HOST RECEPTACLE R/A SMT TYPE -LEAD FREE-

MOLEX INCORPORATED

MATERIAL NO.: SEE TABLE
DOCUMENT NO.: SD-67492-008
SHEET NO.: 1 OF 1
SIZE: A3

THIS DRAWING CONTAINS INFORMATION THAT IS PROPRIETARY TO MOLEX INCORPORATED AND SHOULD NOT BE USED WITHOUT WRITTEN PERMISSION

tb_frame_A3_P_AM_T
Rev. D 2004/06/28

Downloaded from Elcodis.com electronic components distributor