THIS DRAWING IS UNPUBLISHED. RELEASED FOR PUBLICATION 2008
© COPYRIGHT 2008 BY TYCO ELECTRONICS CORPORATION. ALL RIGHTS RESERVED.

LOC	DIST
GP	00

REVISIONS

P	LTR	DESCRIPTION	DATE	DRN	APVD
	B	REV PER ECO-09-020440	11SEP2009	CR	JP

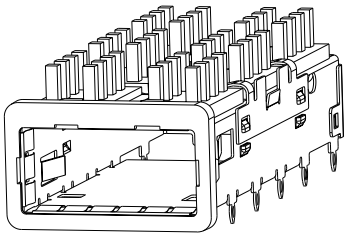

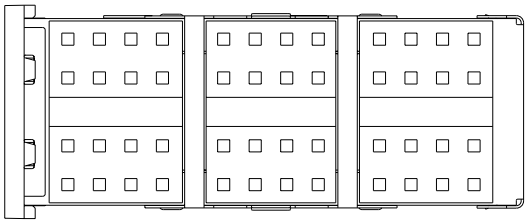

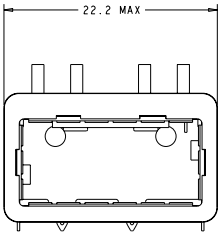

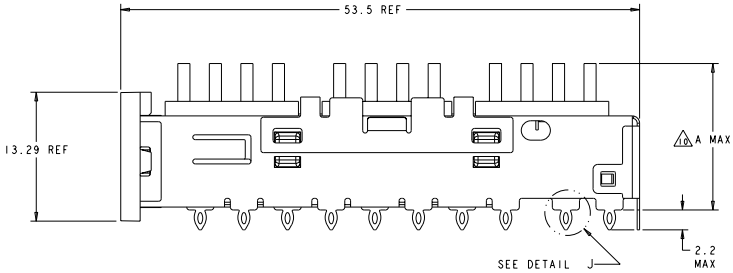

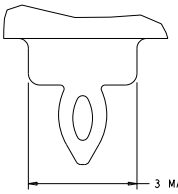

DETAIL J 5
SCALE 20:1

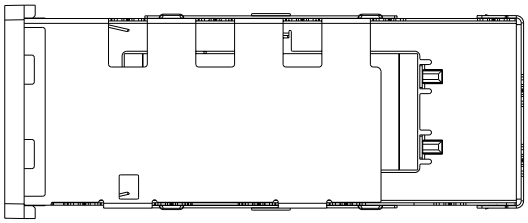

1. CAGE MATERIAL: NICKEL SILVER, 0.25 THICK
   HEAT SINK MATERIAL: ALUMINUM
   HEAT SINK CLIP MATERIAL: STAINLESS STEEL
   EMI SPRING MATERIAL: COPPER ALLOY
   FRONT FLANGE MATERIAL: ZINC ALLOY
2. MINIMUM PITCH DIMENSION.
3. MATES WITH QSFP MSA COMPATIBLE TRANSCEIVER.
4. REFERENCE APPLICATION SPEC 114-13218 FOR RECOMMENDED DRILL HOLE DIAMETER AND PLATING THICKNESS.
5. DATUMS AND BASIC DIMENSIONS ESTABLISHED BY CUSTOMER.
6. DIMENSION C IS THE NOMINAL THICKNESS OF CUSTOMER SUPPLIED PC BOARD.
   SINGLE SIDED PC BOARD MINIMUM THICKNESS: 1.45
   DOUBLE SIDED PC BOARD MINIMUM THICKNESS: 2.7.
7. HEAT SINK AND CLIP SHIPPED ASSEMBLED TO CAGE ASSEMBLY CAGE ASSEMBLY MAY BE PRESSED INTO THE PCB AS SHIPPED.
8. DATUM -A- IS TOP SURFACE OF HOST BOARD.
9. SURFACE TRACES PERMITTED WITHIN THIS AREA EXCEPT WHERE CAGE STANDOFFS, SHOWN IN DETAIL J, CONTACT PC BOARD.
10. DIMENSION APPLIES WITH MODULE INSTALLED IN THE CAGE.
11. DATE CODE (YYWWD) MARKED ON TOP OF CAGE AND CONCEALED BY HEAT SINK APPLIES TO CAGE ASSEMBLY ONLY.
12. EMI SPRING FINISH: 2µm MIN TIN.
    FRONT FLANGE FINISH: 3µm MIN TIN OVER 1.27µm MIN NICKEL OVER 5.08µm MIN COPPER.
    HEAT SINK FINISH: 0.076µm MIN NICKEL.
13. PRODUCT HAS NOT COMPLETED QUALIFICATION TESTING.

A	DESCRIPTION	PART NUMBER
23.0	NETWORKING HEAT SINK	1888968-3
16.0	SAN HEAT SINK (SHOWN)	1888968-2
13.7	PCI HEAT SINK	1888968-1

THIS DRAWING IS CONSIDERED THE PRIMARY AMP TYCO ELECTRONICS SPECIFICATION. ANY DEVIATIONS MUST BE APPROVED BY THE TYCO ELECTRONICS SPECIFICATION AUTHORITY.

DIMENSIONS: MM

TOLERANCES UNLESS OTHERWISE SPECIFIED:
0 PLC ±-
1 PLC ±0.5
2 PLC ±0.13
3 PLC ±0.013
4 PLC ±0.0051
ANGLE ±-
FINISH 12

MATERIAL 1

DWN: JPFEB2007
CHK: VALENTIN JPFEB2007
APVD: E. BRIGHT JPFEB2007
PRODUCT SPEC: 108-2286
APPLICATION SPEC: 114-13218
WEIGHT: -

Tyco Electronics
Tyco Electronics
Harrisburg, PA 17105-3608

NAME: CAGE ASSEMBLY, BEHIND BEZEL, QSFP, WITH HEAT SINK

SIZE: A | CAGE CODE: 00779 | DRAWING NO: C-1888968 | RESTRICTED TO: -

CUSTOMER DRAWING | SCALE: 5:1 | SHEET 1 OF 5 | REV B

AMP 4805 REV 31MAR2000
Pro/ENGINEER DRAWING

Downloaded from Elcodis.com electronic components distributor

THIS DRAWING IS UNPUBLISHED. RELEASED FOR PUBLICATION 2000
© COPYRIGHT 20 BY TYCO ELECTRONICS CORPORATION. ALL RIGHTS RESERVED.

LOC	DIST
GP	00

REVISIONS

P	LTR	DESCRIPTION	DATE	DWN	APVD
	-	SEE SHEET 1	-	-	-

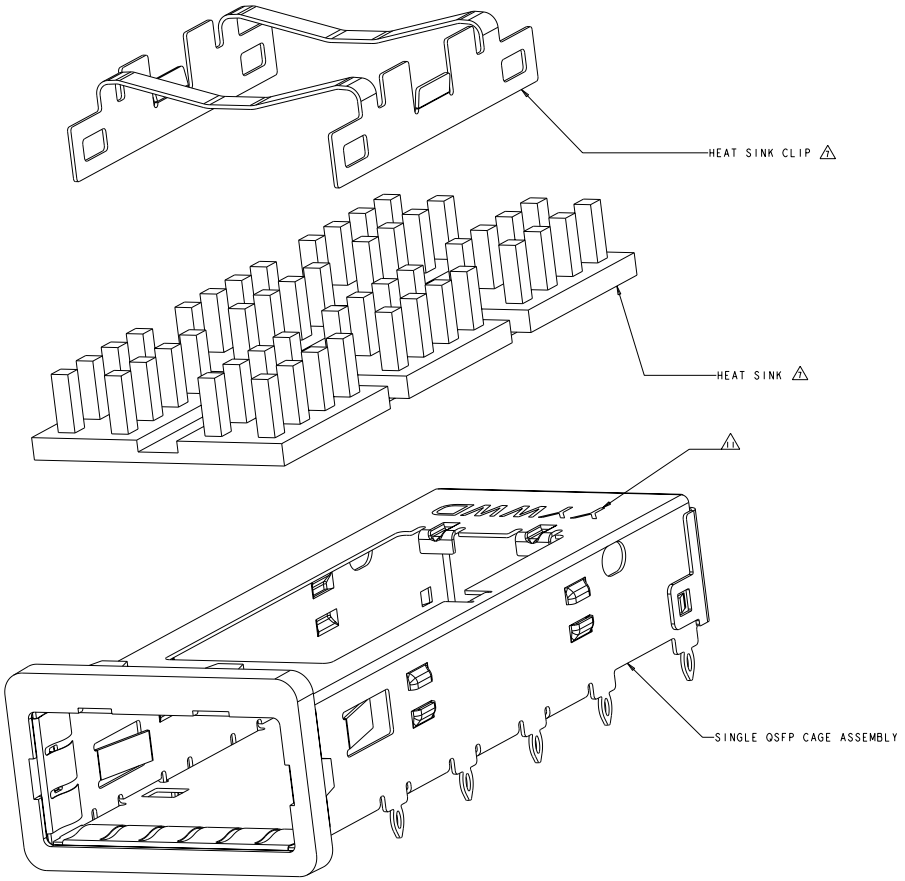

EXPLODED VIEW
SCALE 8:1

DRW	9FEB2007	Tyco Electronics, Harrisburg, PA 17105-3608
CHK	D. VALENTINE 9FEB2007	
APV	E. BRIGHT 9FEB2007	NAME: CAGE ASSEMBLY, BEHIND BEZEL, QSFP, WITH HEAT SINK
PRODUCT SPEC	108-2286	
APPLICATION SPEC	114-13218	
WEIGHT	-	
SIZE	A1	
CAGE CODE	00779	
DRAWING NO	C-1888968	
RESTRICTED TO	-	
SCALE	5:1	
SHEET	2 OF 5	
REV	B	

DIMENSIONS: MM

TOLERANCES UNLESS OTHERWISE SPECIFIED:
0 PLC ±-
1 PLC ±0.5
2 PLC ±0.13
3 PLC ±0.013
4 PLC ±0.0013
ANGLES ±-

MATERIAL

FINISH

CUSTOMER DRAWING

AMP 4805 REV 31MAR2000

Downloaded from Elcodis.com electronic components distributor

THIS DRAWING IS UNPUBLISHED. RELEASED FOR PUBLICATION 2000
© COPYRIGHT 20 BY TYCO ELECTRONICS CORPORATION. ALL RIGHTS RESERVED.

LOC	DIST
GP	00

REVISIONS

P	LTR	DESCRIPTION	DATE	DWN	APVD
	-	SEE SHEET 1	-	-	-

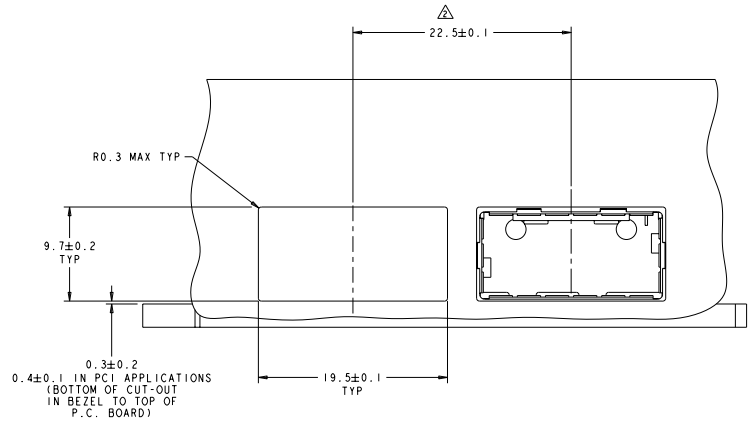

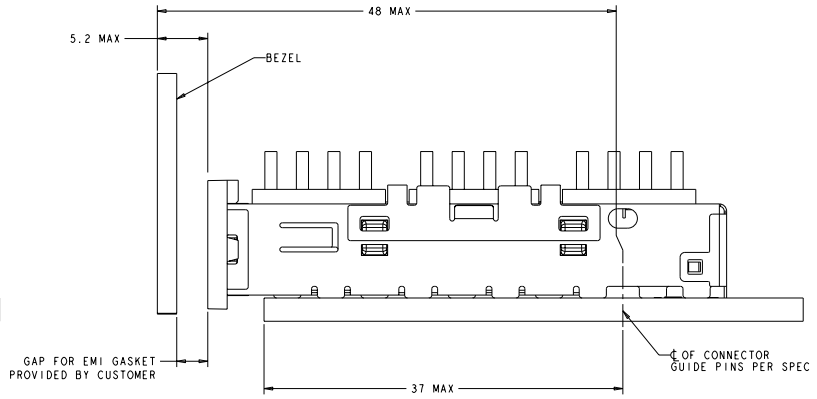

ONE SIDED CONFIGURATION

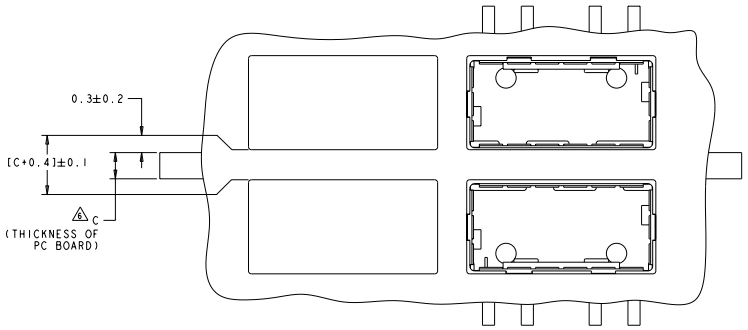

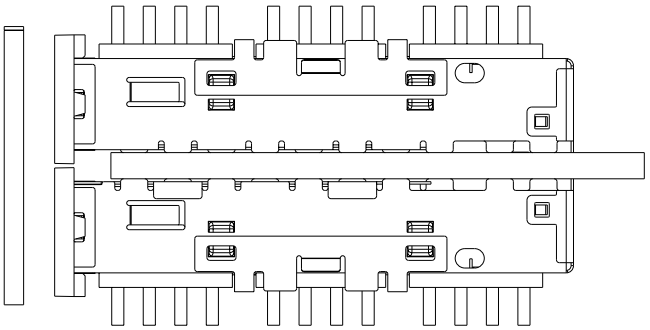

BELLY TO BELLY CONFIGURATION
SIMILAR TO ONE SIDED EXCEPT
WHERE NOTED

DWN	SFEB2007	Tyco Electronics
CHK	D. VALENTIN SFEB2007	Harrisburg, PA 17105-3608
APVD	E. BRIGHT SFEB2007	
	E. BRIGHT	

DIMENSIONS: MM

TOLERANCES UNLESS OTHERWISE SPECIFIED:
0 PLC ±-
1 PLC ±0.5
2 PLC ±0.13
3 PLC ±0.013
4 PLC ±0.0005
ANGLES ±-

MATERIAL -

FINISH -

WEIGHT -

PRODUCT SPEC 108-2286

APPLICATION SPEC 114-13218

NAME CAGE ASSEMBLY, BEHIND BEZEL, QSFP, WITH HEAT SINK

SIZE	CAGE CODE	DRAWING NO	RESTRICTED TO
A1	00779	C-1888968	-

CUSTOMER DRAWING

SCALE 5:1 SHEET 3 OF 5 REV B

AMP 4805 REV 31MAR2000

Downloaded from Elcodis.com electronic components distributor

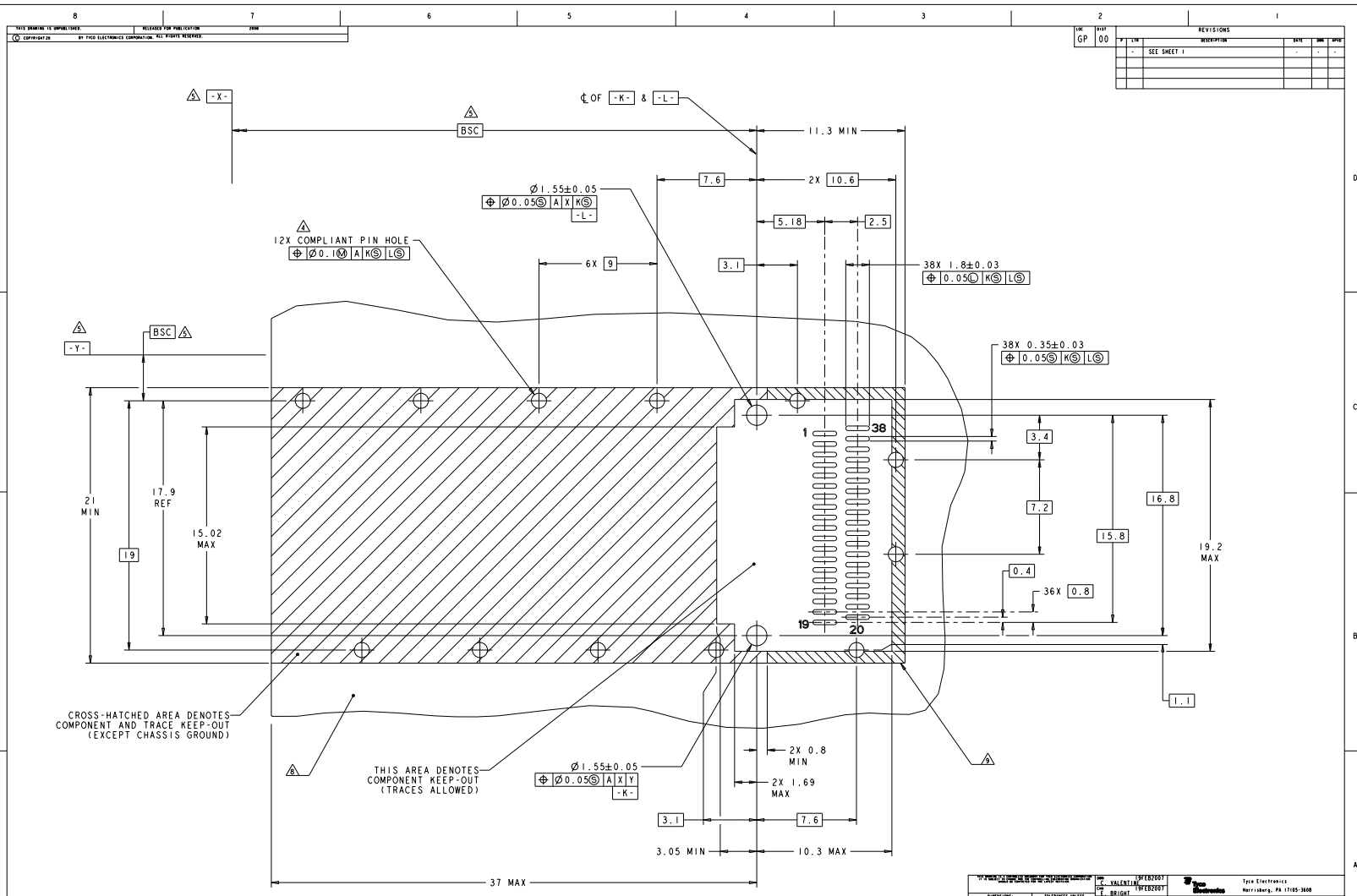

RECOMMENDED PCB LAYOUT
SINGLE SIDED CONFIGURATION
SCALE 8:1

LOC	DIST
GP	00

REVISIONS

#	LTR	DESCRIPTION	DATE	DWN	APVD
	-	SEE SHEET 1	-	-	-

DWN D. VALENTIN 1FEB2007
CHK E. BRIGHT 1FEB2007
APVD E. BRIGHT 1FEB2007

PRODUCT SPEC 108-2286
APPLICATION SPEC 114-13218
WEIGHT -

Tyco Electronics
Harrisburg, PA 17105-3608

NAME CAGE ASSEMBLY, BEHIND BEZEL, QSFP, WITH HEAT SINK

SIZE A | CAGE CODE 00779 | DRAWING NO C-1888968 | RESTRICTED TO -

CUSTOMER DRAWING | SCALE 4:1 | SHEET 4 OF 5 | REV B

DIMENSIONS: MM

TOLERANCES UNLESS OTHERWISE SPECIFIED:
0 PLC ±-
1 PLC ±0.5
2 PLC ±0.13
3 PLC ±0.013
4 PLC ±0.0051
ANGLES ±-

MATERIAL -
FINISH -

THIS DRAWING IS CONSIDERED TO BE PART OF THE ELECTRONIC REPRESENTATION OF A PRODUCT DEFINED IN THE TYCO ELECTRONICS SPECIFICATION LISTED IN THE PRODUCT SPEC FIELD ABOVE.

THIS DRAWING IS UNPUBLISHED. RELEASED FOR PUBLICATION 2006
© COPYRIGHT 20 BY TYCO ELECTRONICS CORPORATION. ALL RIGHTS RESERVED.

AMP 4805 REV 31MAR2000

Downloaded from Elcodis.com electronic components distributor

THIS DRAWING IS UNPUBLISHED. RELEASED FOR PUBLICATION 2000
© COPYRIGHT 20 BY TYCO ELECTRONICS CORPORATION. ALL RIGHTS RESERVED.

LOC	DIST
GP	00

REVISIONS

P	LTR	DESCRIPTION	DATE	DWN	APVD
	-	SEE SHEET 1	-	-	-

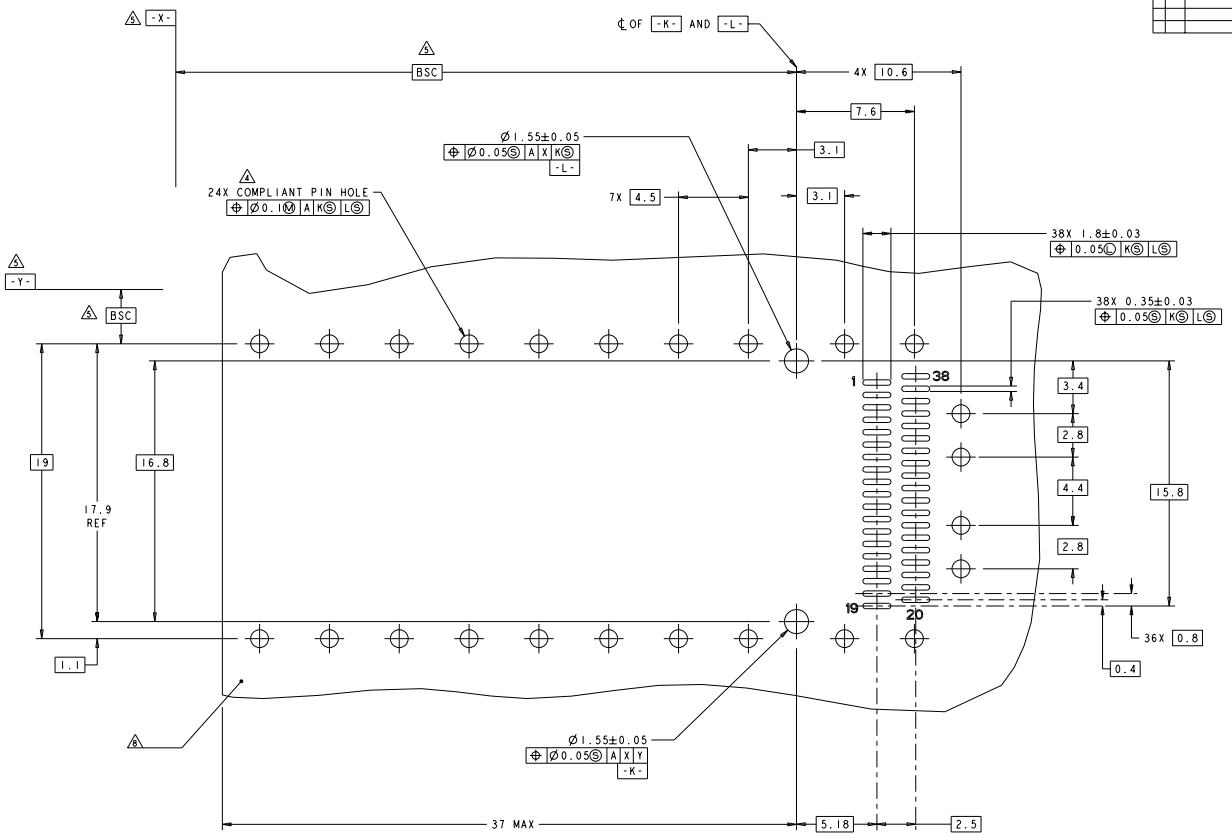

RECOMMENDED PCB LAYOUT
BELLY TO BELLY CONFIGURATION
SEE SHEET 4 FOR KEEP OUT AREAS
SCALE 8:1

DWN	9FEB2007	Tyco Electronics, Harrisburg, PA 17105-3608
CHK	VALENTIN 9FEB2007	
APVD	E. BRIGHT 9FEB2007	CAGE ASSEMBLY, BEHIND BEZEL, QSFP, WITH HEAT SINK
PRODUCT SPEC	108-2286	
APPLICATION SPEC	114-13218	
WEIGHT	-	
CUSTOMER DRAWING	SIZE A1 / CAGE CODE 00779 / DRAWING NO C-1888968	SCALE 4:1 / SHEET 5 OF 5 / REV B / RESTRICTED TO -

DIMENSIONS: MM
TOLERANCES UNLESS OTHERWISE SPECIFIED:
0 PLC ±-
1 PLC ±0.5
2 PLC ±0.13
3 PLC ±0.013
4 PLC ±0.0013
ANGLES ±-
MATERIAL
FINISH

AMP 4805 REV 31MAR2000

Downloaded from Elcodis.com electronic components distributor