THIS DRAWING IS UNPUBLISHED. RELEASED FOR PUBLICATION 20
© COPYRIGHT 20 BY TYCO ELECTRONICS CORPORATION. ALL RIGHTS RESERVED.

LOC	DIST
GP	00

REVISIONS

P	LTR	DESCRIPTION	DATE	DWN	APVD
	C	REVISED PER ECO-09-022874	06OCT2009	ZMR	MRS
	D	REV PER ECO-10-020380	06OCT2010	JTL	MRS

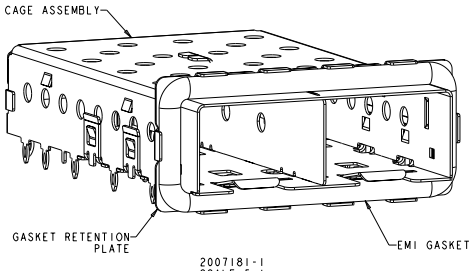

2007181-1
SCALE 5:1

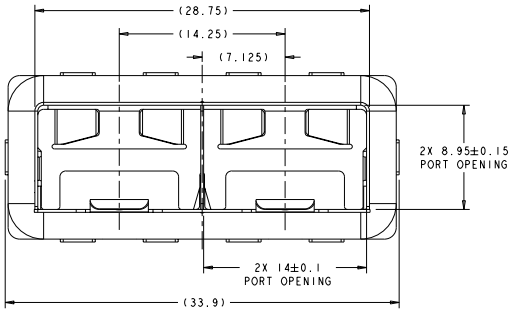

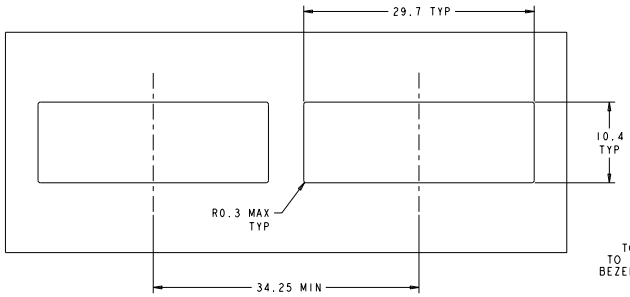

RECOMMENDED BEZEL CUT-OUT
SCALE 4:1

1. MATERIAL:
   CAGE ASSEMBLY - 0.25mm THICK NICKEL SILVER ALLOY
   GASKET RETENTION PLATE - STAINLESS STEEL
   EMI GASKET - PLATED FILLED SILICONE

2. DATUM AND BASIC DIMENSION ESTABLISHED BY CUSTOMER.

3. MATES WITH SFP MSA COMPLIANT TRANSCEIVERS.

4. PADS AND VIAS CHASSIS GROUND.

5. INTERPRETATION OF DATUM REFERENCE FRAME IN ACCORDANCE WITH SECT 4.4.1.1 OF ASME Y14.5M-1994.

6. MINIMUM PC BOARD THICKNESS = 1.50mm.

7. HOLE PATTERN REPEATS FOR EACH PORT, SPACING BETWEEN PORTS IS 14.25mm.

8. REFFERENCE APPLICATION SPEC. 114-13120, HOLE A, FOR RECOMMENDED DRILL HOLE DIAMETER AND PLATING THICKNESS.

9. REFFERENCE APPLICATION SPEC. 114-13120, HOLE B, FOR RECOMMENDED DRILL HOLE DIAMETER AND PLATING THICKNESS.

10. PRODUCT COMPLIES WITH SPECIFICATION SFF-8433 IMPROVED PLUGGABLE FORM FACTOR FOR SFP+ GANGED CAGES.

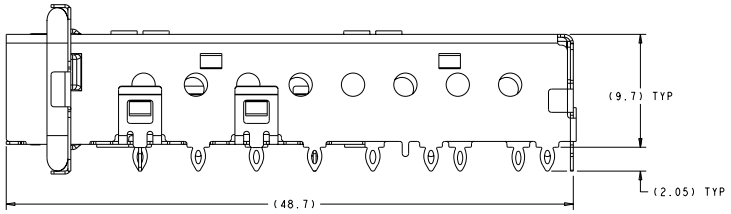

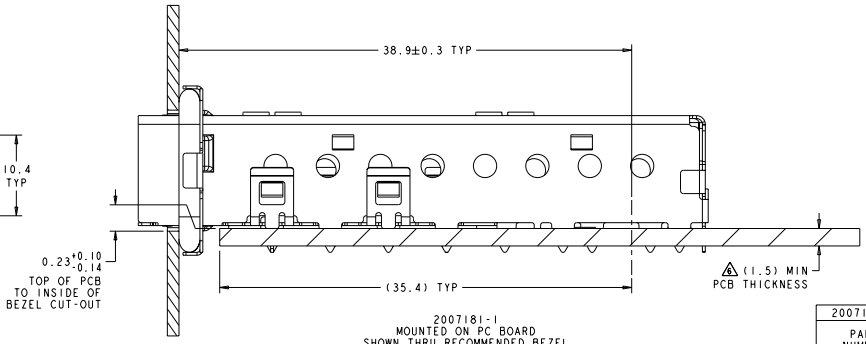

2007181-1
MOUNTED ON PC BOARD
SHOWN THRU RECOMMENDED BEZEL

2007181-1
PART NUMBER

THIS DRAWING IS A PROPRIETARY DOCUMENT OF TYCO ELECTRONICS CORPORATION. NO REPRODUCTION OR DISTRIBUTION WITHOUT WRITTEN PERMISSION IS PERMITTED.

DWN	M. SCHMITT	17JUL2007
CHK	M. SCHMITT	17JUL2007
APV	B. WEBTZ	17JUL2007

DIMENSIONS: MM
TOLERANCES UNLESS OTHERWISE SPECIFIED:
0 PLC ±0.1
1 PLC ±0.1
2 PLC ±0.1
3 PLC ±0.1
4 PLC ±0.1
ANGLES ±1°±
FINISH -
MATERIAL 6

Tyco Electronics
Harrisburg, PA 17105-3608

NAME -
PRODUCT SPEC 108-2364
APPLICATION SPEC 114-13120
WEIGHT -

SIZE	CAGE CODE	DRAWING NO	RESTRICTED TO
A1	00779	C-2007181	-

CUSTOMER DRAWING SCALE 6:1 SHEET 1 OF 2 REV D

AMP 4805 REV 31MAR2000
Pro/ENGINEER DRAWING

Downloaded from Elcodis.com electronic components distributor

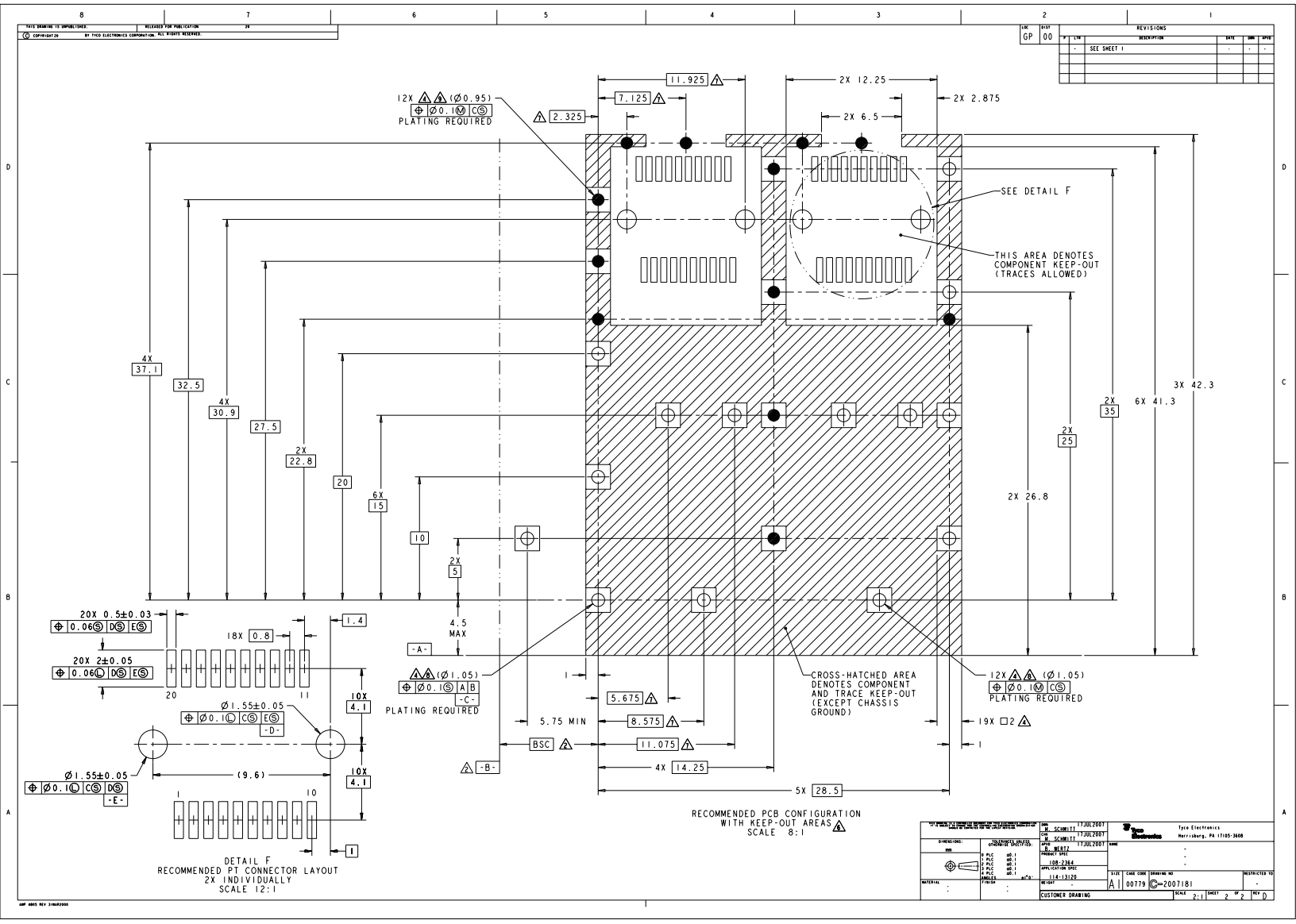

Downloaded from Elcodis.com electronic components distributor