DATE	REV	ECN	APP'D. BY
1/31/06	A1	7461	JM
2-23-06	A2	7515	JM

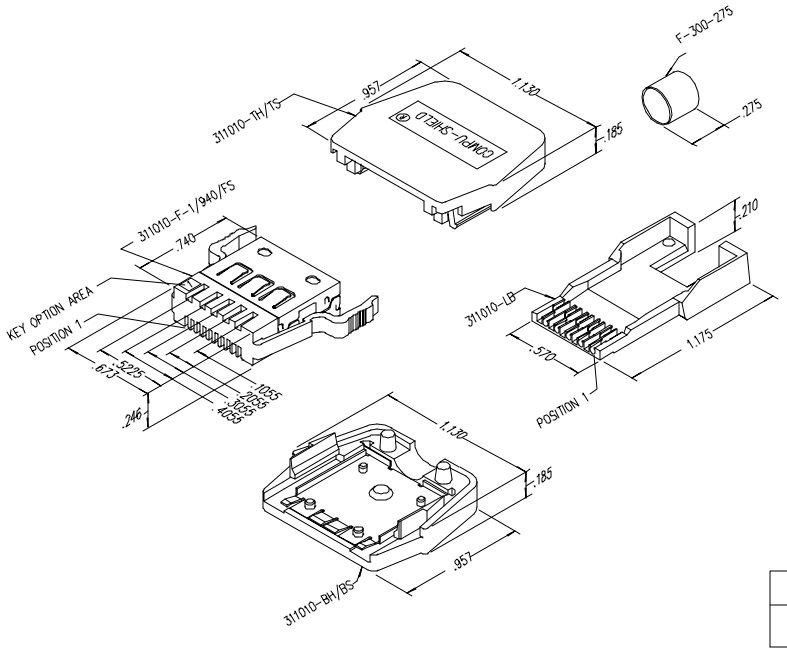

NOTES:

1. PLUG MATERIALS:
   TOP/BOTTOM HOUSING: PC UL94 V-0 COLOR: BLACK
   FRONT PLASTIC: PC UL94 V-0 COLOR: BLUE
   LOAD BAR: PC UL94 V-0 COLOR: CLEAR
   CONTACTS/SHIELD: COPPER ALLOY
   SHIELD/FERRULE PLATING: TIN
   CONTACT PLATING: SELECTIVE GOLD IN CONTACT AREA
   SEE CHART FOR PART NUMBER
2. CONTACTS TERMINATE SOLID OR STRANDED CONDUCTORS UP TO .042" OUTSIDE DIAMETER OF INSULATION
3. TOLERANCES COMPLY WITH F.C.C. DIMENSION REQUIREMENTS.
4. HOUSING WILL ACCEPT CABLE UP TO .220" OUTSIDE DIAMETER OF JACKET
5. FOR PRODUCT SPECIFICATIONS SEE PR026-01
6. TERMINATED PLUG HEIGHT .234±.002

BULK	50 MICRO-INCHES [1.27um]	SS-311010-1
PACKAGE	CONTACT PLATING IN MATING AREA	PART NUMBER

THIRD ANGLE PROJECTION

DO NOT SCALE DRAWING
DRAWING IS SUBJECT TO CHANGE WITHOUT NOTICE
DIMENSIONS: INCHES [METRIC]
UNLESS OTHERWISE SPECIFIED TOLERANCES ARE ±.005 [0.13] ANGLES ARE ± 1°
SHEET NO. 1 OF 1

Bel Stewart Connector
11118 Susquehanna Trail South
Glen Rock, PA 17327-9199
(717) 235-7512 Fax: (717) 235-7954 http://www.stewartconnector.com

TITLE: 10X10 COMPU-SHIELD PLUG FINAL ASSEMBLY

THIS DRAWING AND THE SUBJECT MATTER SHOWN THEREON ARE CONFIDENTIAL AND THE PROPRIETARY PROPERTY OF BEL STEWART CONNECTOR AND SHALL NOT BE REPRODUCED, COPIED, OR USED IN ANY MANNER WITHOUT PRIOR WRITTEN CONSENT OF BEL STEWART CONNECTOR. THE SUBJECT MATTER MAY BE PATENTED OR A PATENT MAY BE PENDING.

DRN BY:	TRM	DATE	5-15-01
APPD BY:	TRM	DATE	5-16-01
DWG NO.	CT310030	REV.	A2

AutoCAD

REV. 7/3/03

Downloaded from Elcodis.com electronic components distributor