THIS DRAWING IS UNPUBLISHED. RELEASED FOR PUBLICATION: -,-* - -
© COPYRIGHT - BY TYCO ELECTRONICS CORPORATION. ALL RIGHTS RESERVED.

LOC	DIFF
AA	22

REVISIONS

P	LTR	DESCRIPTION	DATE	DWN	APVD
	B	REV PER ECO-08-013000	14APR2008	DC	TX

MECHANICAL:

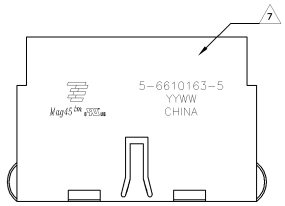

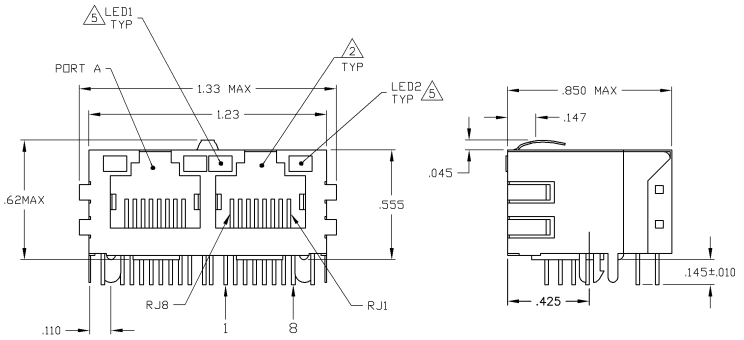

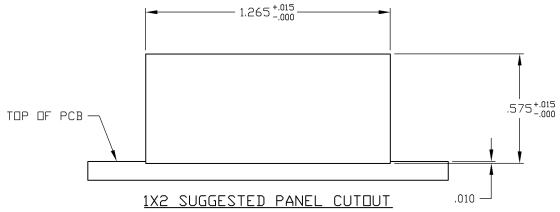

1X2 SUGGESTED PANEL CUTOUT

1. MATERIALS:
-HOUSING - THERMOPLASTIC PET POLYESTER FLAMMABILITY RATING UL 94V-0.
-SHIELD - .010" THICK, C26800 BRASS PREPLATED WITH 30µINCH MIN SEMI-BRIGHT NICKEL. SOLDER TABS POST DIPPED WITH 100mINCH MIN SAC SOLDER.
-MOD JACK CONTACTS - 0.0157 X 0.018" PHOSPHOR BRONZE, 50µINCH MIN OVERALL NICKEL UNDERPLATE WITH SELECT 50mINCH MIN HARD GOLD FINISH PLATE.
SOLDERTAILS WITH 100µINCH MIN MATTE TIN AND/OR SAC SOLDER DIP.
-LIGHT EMITTING DIODE(LED) - DIFFUSED EPOXY LENS, .020" X .020" CARBON STEEL WIREFRAME LEADS PRE-PLATED WITH 80µINCH SILVER OVER 40µINCH NICKEL UNDERPLATE OVER 40µINCH COPPER UNDERPLATE. POST-PLATED WITH 100µIN MIN MATTE TIN AND/OR SAC SOLDER DIP OR PURE TIN SOLDER DIP.

2. RJ45 JACK CAVITY CONFORMS TO FCC RULES AND REGULATIONS PART 68, SUB PART F.

3. MAGNETICS
-IMPEDANCE: 100 OHMS
-TURNS RATIO (CHIP:CABLE): TX = 1:1, RX = 1:1
-OPEN CIRCUIT INDUCTANCE (OCL): 350mH MIN @100kHz, 0.1VRMS, 8mADC BIAS FROM 0°C TO 70°C, TX AND RX
-PERFORMANCE @ 25°C:
INSERTION LOSS (IL): 1.1dB MAX FROM 0.5MHz TO 100MHz
RETURN LOSS (RL): 18dB MIN FROM 0.5MHZ TO 30MHz
18-20LOG(f/30)dB MIN FROM 30.1MHz TO 60MHz
12dB MIN FROM 60.1MHz TO 80MHz
CROSSTALK ATTENUATION: 35dB MIN FROM 0.5MHz TO 40MHz
33-20*LOG(f/50)dB MIN FROM 40.1MHz TO 100MHz
COMMON MODE REJECTION RATIO (CMRR): 30dB MIN FROM 0.5MHz TO 100MHz
-ISOLATION VOLTAGE: COMPLIES WITH IEEE802.3 2002, PARA 23.5.1.1, ITEM b.

4. OPERATING TEMPERATURE: 0°C TO +70°C.

5. THE LED WITH 250 OHM RESISTORS,LED IS DRIVEN WITH 5V VOLTAGE AND THE MAX OPERATING CURRENT IS 20mA.LED COLOR :
DOMINANT WAVELENGTH (λD): GREEN 568 nm TYP. @ VF=5V
FORWARD CURRENT (IF): GREEN 12 mA TYP. @ VF=5V
DOMINANT WAVELENGTH (λD): YELLOW 588 nm TYP. @ VF=5V
FORWARD CURRENT (IF): YELLOW 13 mA TYP. @ VF=5V

6. INDICATED CONNECTIONS ARE FOR NIC CONFIGURATION. THE MAGNETICS ARE SYMMETRIC AND SUPPORT AUTO-MDI/MDIX.

7. TYCO ELECTRONICS LOGO, PART NUMBER, DATE CODE, COUNTRY OF ORIGIN AND AGENCY APPROVAL MARKING IN APPROXIMATE LOCATION SHOWN.

8. THE PART IS RECOMMENDED FOR WAVE SOLDERING PROCESS,PEAK WAVE SOLDERING TEMPERATURE IS 265°C MAX,10 SECONDS MAX.

GREEN/YELLOW	GREEN	5-6610163-5
LED1 5	LED2 5	PART NUMBER

THIS DRAWING IS A CONTROLLED DOCUMENT.

DWN: G. ATTADA - 19MAR2008
CHK: D. FAROLE - 19MAR2008
APVD: D. FAROLE - 19MAR2008

Tyco Electronics Corporation
Harrisburg, PA 17105-3608

DIMENSIONS: INCHES
TOLERANCES UNLESS OTHERWISE SPECIFIED:
0 PLC ± -
1 PLC ± .1
2 PLC ± .010
3 PLC ± .005
4 PLC ± -
ANGLES ± -
MATERIAL 1
FINISH 1

PRODUCT SPEC: 108-2100
APPLICATION SPEC: -
WEIGHT: -

NAME: 1X2 MAG45(TM) MODULAR JACK, 7N2 SCHEMATIC, 715 SERIES MAGNETIC CIRCUIT, SHIELDED, DECOUPLING CAPACITOR, WITH LEDS

SIZE: A1 | CAGE CODE: 00779 | DRAWING NO: C-6610163 | RESTRICTED TO: -

CUSTOMER DRAWING | SCALE: 4:1 | SHEET 1 OF 2 | REV B

AMP 4805 REV 21MAR2000

Downloaded from Elcodis.com electronic components distributor

THIS DRAWING IS UNPUBLISHED. RELEASED FOR PUBLICATION: -,-,-
© COPYRIGHT - BY TYCO ELECTRONICS CORPORATION. ALL RIGHTS RESERVED.

LOC AA SHT 22

REVISIONS

P	LTR	DESCRIPTION	DATE	DWN	APVD
	–	SEE SHEET 1	–	–	–

715 SERIES MAGNETIC CIRCUIT 3 6

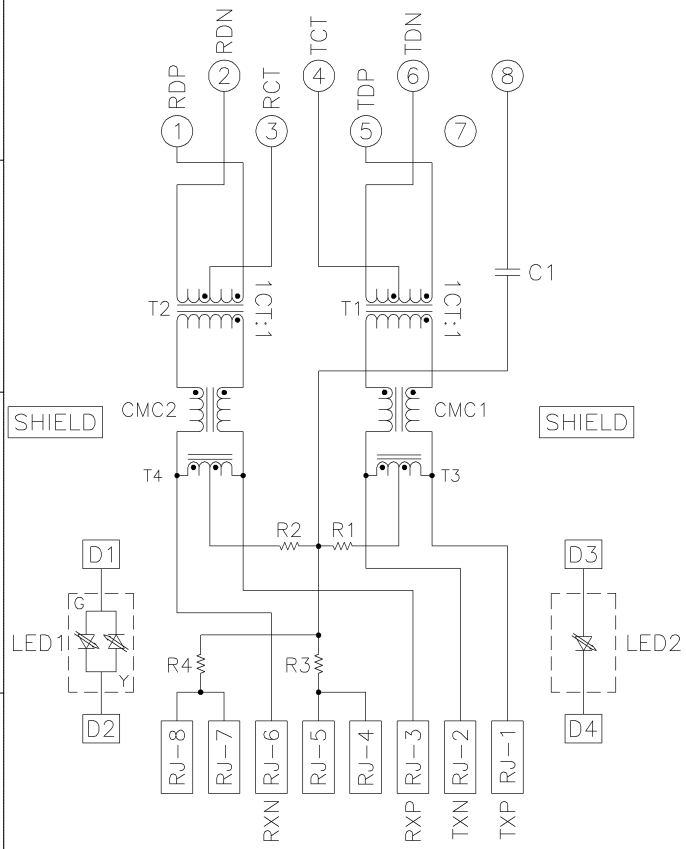

C1 = 1000 pF, 2KV CAPACITOR

R1-R4 = 75 OHMS, 1/16 W, RESISTORS

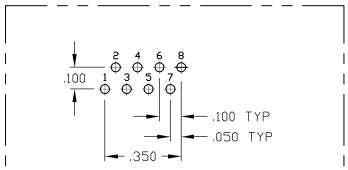

PIN DESIGNATION

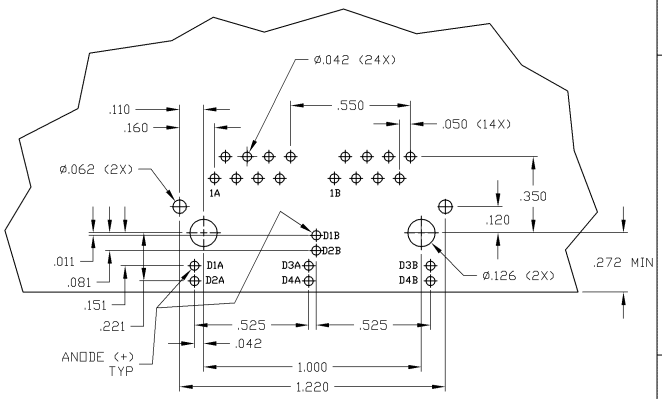

SUGGESTED PCB LAYOUT
(Component Side)

THIS DRAWING IS A CONTROLLED DOCUMENT.	DRN G. ATIADA – 19MAR2005 / CHK D. FAROLE – 19MAR2005	Tyco Electronics	Tyco Electronics Corporation Harrisburg, PA 17105-3608
DIMENSIONS: INCHES	TOLERANCES UNLESS OTHERWISE SPECIFIED: 3 PLC ± – / 2 PLC ± .010 / 1 PLC ± .005 / ANGLES ± –	APVD D. FAROLE – 19MAR2005 / MODULE SPEC – / APPLICATION SPEC 108-2100	NAME 1X2 MAG45(TM), MODULAR JACK, 7N2 SCHEMATIC, 715 SERIES MAGNETIC CIRCUIT, SHIELDED, DECOUPLING CAPACITOR, WITH LEDS
MATERIAL SEE SHEET 1	FINISH SEE SHEET 1	WEIGHT –	SIZE A1 / CAGE CODE 00779 / DRAWING NO 6610163 / RESTRICTED TO –
		CUSTOMER DRAWING	SCALE 4:1 / SHEET 2 OF 2 / REV B

AMP 4805 REV 31MAR2000

Downloaded from Elcodis.com electronic components distributor